SIEMENS

MAMMOMAT *Novation*^{DR}

SP

Wiring Diagrams

© Siemens AG 2005
The reproduction, transmission or use of this document or its contents is not permitted without express written authority. Offenders will be liable for damages. All rights, including rights created by patent grant or registration of a utility model or design, are reserved.

English
Print No.: SPB7-250.844.01.04.02
Doc. Gen. Date: 01.05
Replaces: SPB7-250.844.01.03.02

Chapter	Page	Revision
all	all	04

Document revision level

The document corresponds to the version/revision level effective at the time of system delivery. Revisions to hardcopy documentation are not automatically distributed.

Please contact your local Siemens office to order current revision levels.

Disclaimer

The installation and service of equipment described herein is to be performed by qualified personnel who are employed by Siemens or one of its affiliates or who are otherwise authorized by Siemens or one of its affiliates to provide such services.

Assemblers and other persons who are not employed by or otherwise directly affiliated with or authorized by Siemens or one of its affiliates are directed to contact one of the local offices of Siemens or one of its affiliates before attempting installation or service procedures.

Contents 0 - 3

Page

Document revision level . . . . . 0 - 2
Disclaimer . . . . . 0 - 2

1 System overview 1 - 1

System overview . . . . . 1 - 1
System overview - stand . . . . . 1 - 2

2 Stand Overview 2 - 1

PLACEMENT OF PC-BOARDS AND COMPONENTS, STAND . . . . . 2 - 1
MAMMOMAT NovationDR - Front . . . . . 2 - 1
MAMMOMAT NovationDR - Back (seen from the right side) . . . . . 2 - 2
LIST OF BOARDS AND FUSES, STAND . . . . . 2 - 4
PCB Overview . . . . . 2 - 4
Fuses Overview . . . . . 2 - 4
LIST OF SWITCHES AND COMPONENTS, STAND . . . . . 2 - 5
Switches . . . . . 2 - 5
Potentiometers . . . . . 2 - 6
Motors . . . . . 2 - 6
Miscellaneous . . . . . 2 - 6
LIST OF SIGNALS AND TEST POINTS, STAND . . . . . 2 - 8
LIST OF VOLTAGES AND TEST POINTS, STAND . . . . . 2 - 12

3 Stand Functional Diagrams 3 - 1

BLOCK DIAGRAM CABLE CONNECTIONS . . . . . 3 - 1
GROUNDING CONNECTIONS . . . . . 3 - 2
MAINS CONNECTION, POWER SUPPLY CPU . . . . . 3 - 3
POWER SUPPLY MOTOR CONTROL . . . . . 3 - 4
DISPLAY . . . . . 3 - 5
CPU BOARD INTERNAL, GENERATOR INTERFACE . . . . . 3 - 6
TUBE, TEMPERATURE MONITORING . . . . . 3 - 7
LIFT AND ROTATION . . . . . 3 - 8
LIFT AND ROTATION MOTOR DRIVE . . . . . 3 - 9
LIFT AND ROTATION SWITCHES . . . . . 3 - 10
COMPRESSION MEASUREMENT SIGNALS . . . . . 3 - 12
COMPRESSION MOTOR DRIVE . . . . . 3 - 13
TUBE ANGLE MEASUREMENT, POT. RETURN, TILT SIGNALS . . . . . 3 - 14
COLLIMATOR 1 . . . . . 3 - 15
COLLIMATOR 2 . . . . . 3 - 16
OBJECT TABLE 1 + 2 . . . . . 3 - 17
PXCM UNIT (BRICK UNIT) . . . . . 3 - 18

Page

4 Generator Overview 4 - 1

MAINS VOLTAGE CONNECTION . . . . . 4 - 1
Electrical power to mains input . . . . . 4 - 1
Power line impedance . . . . . 4 - 1
Connections . . . . . 4 - 1
GENERATOR: LIST OF MODULES AND FUSES
PC-BOARDS: MASTER BOARD D750 . . . . . 4 - 2
Modules . . . . . 4 - 2
Fuses . . . . . 4 - 2
PC-boards . . . . . 4 - 2
GENERATOR: PLACEMENT OF MODULES, CONNECTORS,
LEDs AND POTENTIOMETERS . . . . . 4 - 4
Generator description of MAMMOMAT NovationDR . . . . . 4 - 4
CONTROL PANEL FUNCTIONS . . . . . 4 - 5
D750 MASTER BOARD: LIST OF SWITCHES, TEST POINTS . . . . . 4 - 6
Switches . . . . . 4 - 6
Test points . . . . . 4 - 6
GENERATOR: LIST OF SWITCHES, POTENTIOMETERS, TEST POINTS, LEDs . 4 - 9
Switches . . . . . 4 - 9
Potentiometers . . . . . 4 - 9
Test points . . . . . 4 - 9
LEDs . . . . . .4 - 10

5 General Functional Diagrams 5 - 1

GENERATOR: BLOCK DIAGRAM . . . . . 5 - 1
GENERATOR: MAINS INPUT & MAINS INPUT CONVERTER,
PRINCIPLE DIAGRAM . . . . . 5 - 3
D750 MASTER BOARD: PRINCIPLE DIAGRAM . . . . . 5 - 5
GENERATOR - TUBE POWER SUPPLY:
PRINCIPLE DIAGRAM, TUBE FILAMENT AND FOCUS SELECTION . . . . . 5 - 6
GENERATOR - TUBE POWER SUPPLY:
PRINCIPLE DIAGRAM TUBE ROTATION . . . . . 5 - 7
GENERATOR - HV INVERTER PRINCIPLE DIAGRAM
CONTROL LOGIC . . . . . 5 - 8
GENERATOR - HV INVERTER AND HV TANK: PRINCIPLE DIAGRAM . . . . . 5 - 9
PRINCIPLE DIAGRAM, CONTROL PANEL . . . . . .5 - 10
D750 MASTER BOARD: PRINCIPLE DIAGRAM, AEC . . . . . .5 - 11

6 Generator PC Board Overview 6 - 1

D750 MASTER BOARD: CONTACT LOCATION . . . . . 6 - 1
GENERATOR: CONTACT DIAGRAM . . . . . 6 - 2

7 Changes to previous version 7 - 1

Changes to previous version . . . . . 7 - 1

SYSTEM OVERVIEW

The Mammomat ***Novation***^{DR} system comprises the following:

- X-ray stand and generator with swivel-arm system consisting of X-ray tube assembly and image receptor assemblies (1).
- Radiation shield (option) and control console (2)
- Acquisition workstation with PC, flat screen, keyboard and mouse (3)

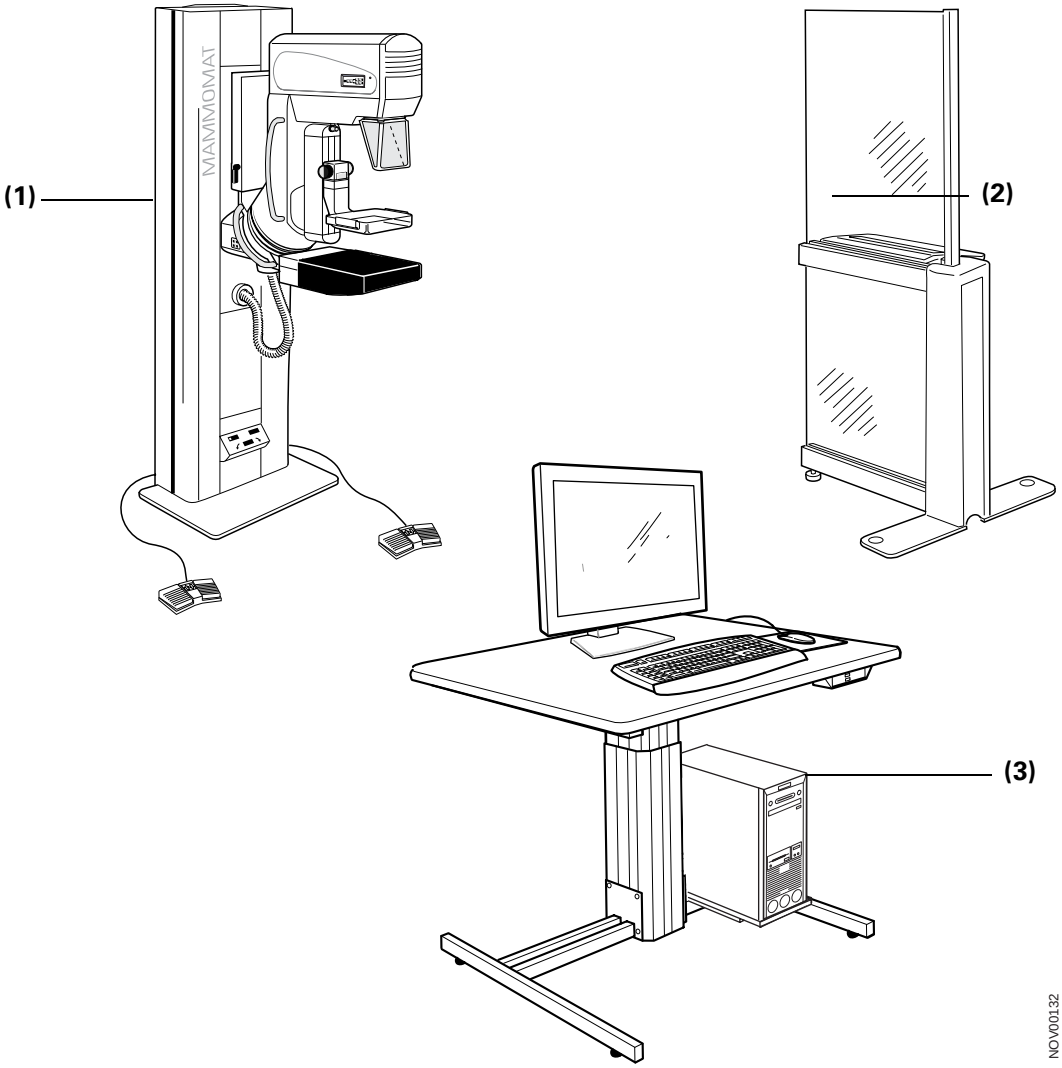

SYSTEM OVERVIEW - STAND

Stand with rotating support arm with one FD (Flat Detector) object table and one 18 x 24 object table (used with Opdima, option) and Mo/W X-ray tube.

⚠CAUTION **An 18 x 24 object table shall always be mounted when rotating the Flying-Wing.**

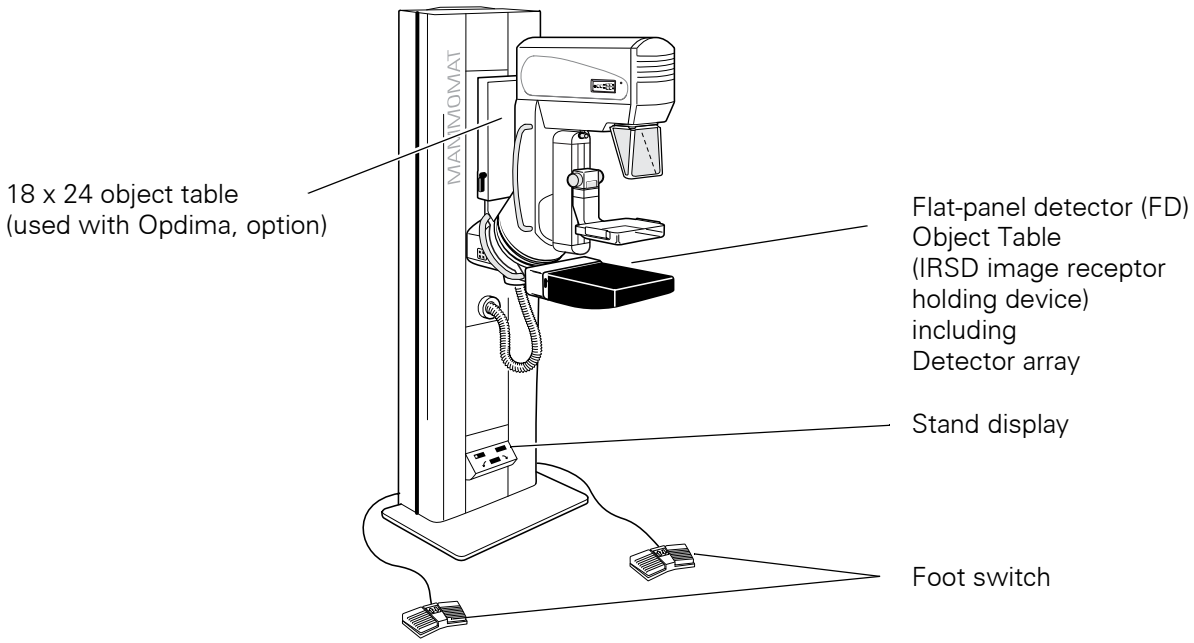

PLACEMENT OF PC-BOARDS AND COMPONENTS, STAND

MAMMOMAT *Novation*^{DR} - Front

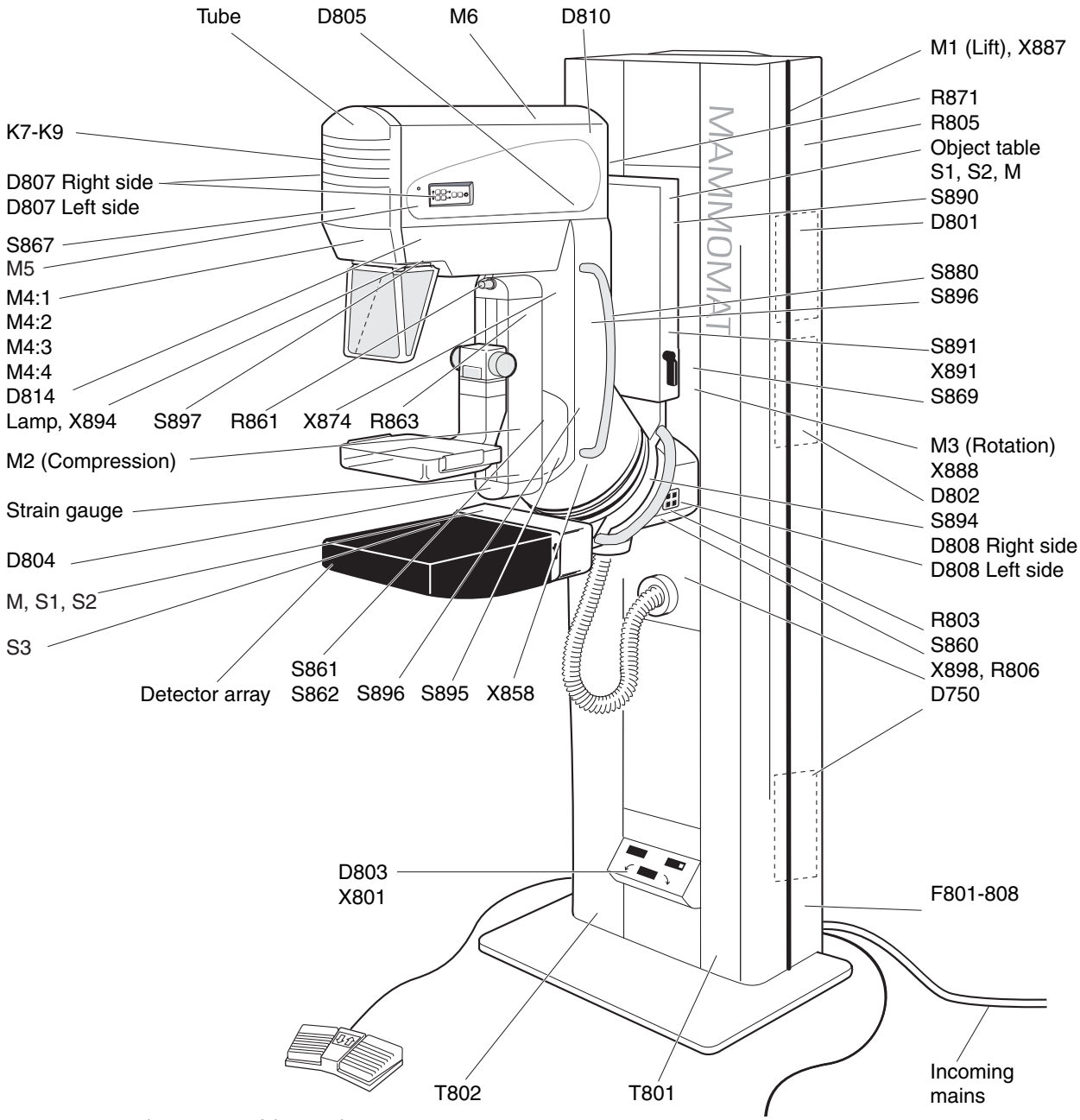

Fig. 1 Front of the stand

MAMMOMAT *Novation*^{DR} - Back (seen from the right side)

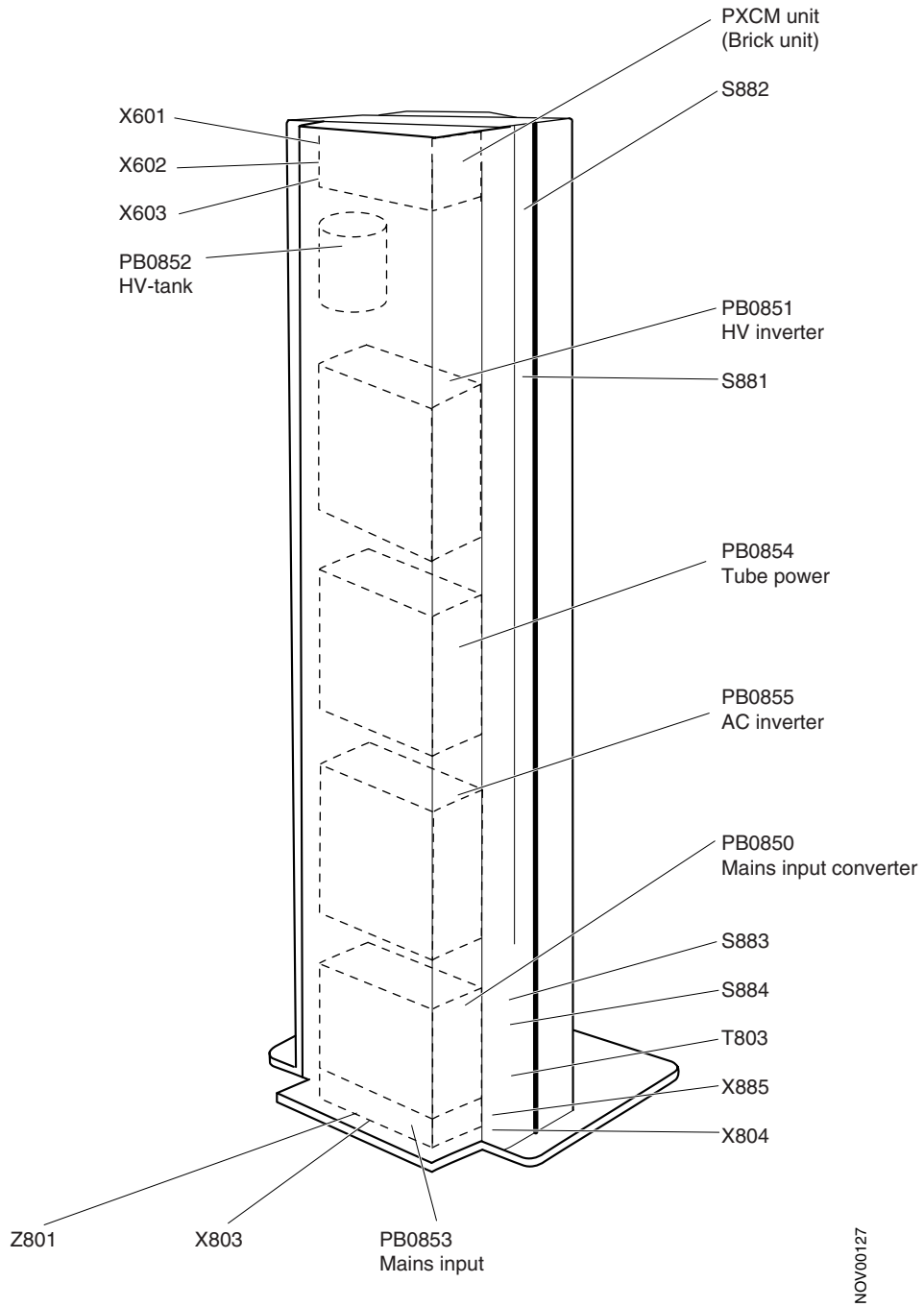

Fig. 2 Back of the stand (seen from the right)

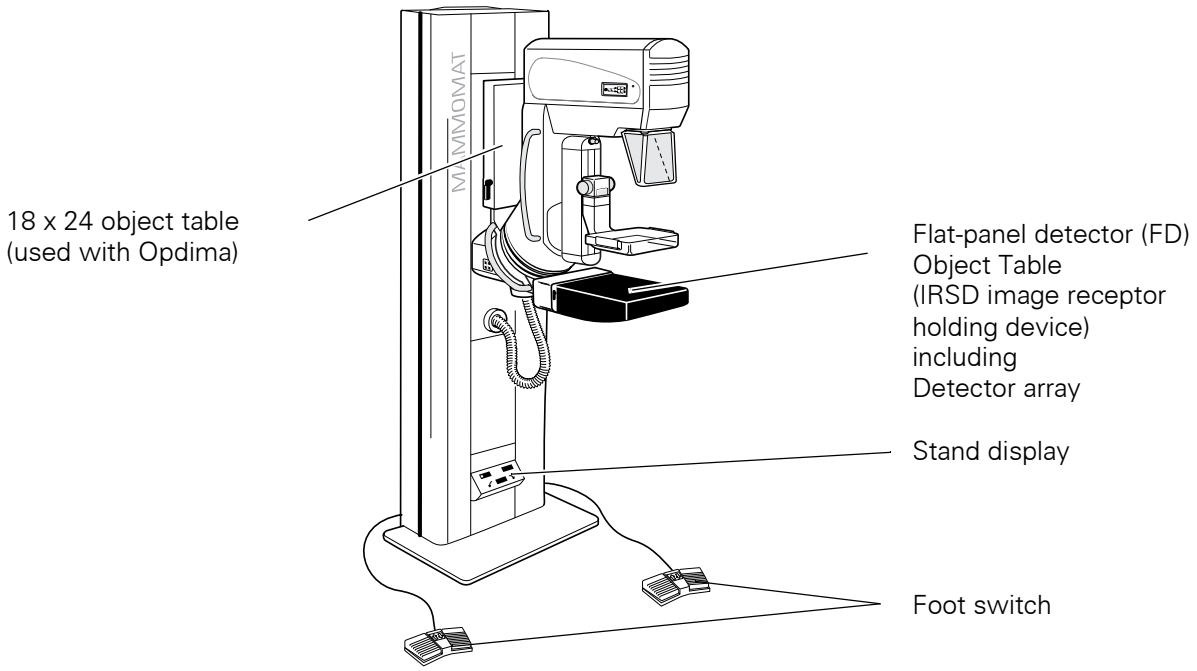

Fig. 3 Stand with rotating support arm

Stand with rotating support arm with one FD (Flat Detector) object table and one 18 x 24 object table (used with Opdima) and Mo/W X-ray tube.

LIST OF BOARDS AND FUSES, STAND

PCB Overview

D750	MASTER BOARD
D801	STAND CPU BOARD
D802	MOTOR CONTROL BOARD
D803	DISPLAY BOARD
D804	FORCE AMPLIFIER BOARD
D805	WING BOARD
D807	BOARD FOR LIFT, ROTATION AND LAMP SWITCHES
D808	BOARD FOR LIFT AND ROTATION SWITCHES
D810	TILT SWITCH BOARD
D814	COLLIMATOR CONTROL BOARD

Fuses Overview

PCB	FUSE	FUSED VOLTAGE
D750	F1 0.5 A	10.5 VAC
D750	F2 0.5 A	10.5 VAC
D801	F1 2 AT	+5V, +5V_REF, +5V_DSP, +7V
D801	F2 1 AT	+5V_MPS
D802	F1 5 AT	+5V, +5V_M, +14V, D805/+5V
D802	F2 3.15 AT	+24VF, +15V
D802	F3 6.3 AT	+24V
D802	F5 5AT	17VAC (LAMP)
D802	F4 1 AT	24VACF (FAN)
Chassis-mounted fuses		
	F801 2 AT	11 VAC
	F802 1 AT	11 V_MPS
	F803 5 AT	14 VAC
	F804 5 AT	17 VAC
	F805 6.3 AT	24 VAC
	F806 1AT	18 VAC
	F807 2AT	400 VAC
	F808 2AT	400 VAC
Brick unit-mounted fuses		
	2 AT	230 VAC
	2 AT	230 VAC

NOTE! See spare parts list for replacement fuses.

LIST OF SWITCHES AND COMPONENTS, STAND

Switches

Switch	Page	Description
S1/D801	3-6/1D	Reset switch for stand CPU.
S1/Object table 1	3-17/3A	Grid out switch located in the object table 1.
S1-1-4/D802	3-9/2D	Current limit switches: 1=+3%, 2=+6%, 3=+12%, 4=+24%.
S1-5/D802	3-9/2D	Tacho On/Off switch for rotation motor drive.
S1-S6/D807	3-10/3A	Control switches for lamp, lift- and rotation movement. Left and right side.
S1-S4/D808	3-10/4A	Control switches for lift- and rotation movement. Left and right side.
S2/Object table 1	3-17/2A	Cassette inserted switch.
S860	3-17/3C	Stereo lever switch.
S861	3-13/1G	Compression limit switch, compression unit.
S862	3-13/2G	Decompression limit switch, compression unit.
S867	3-16/3G	Filter / mirror disk micro switch.
S869	3-8/3G	Tacho optoswitch
S880	3-4/2B	Emergency stop, switches off 24VAC and 14VAC, machine blocked.
S881	3-9/1G	Lift up limit switch, rotating unit.
S882	3-4/2A	Limit switch, distance tube head - floor <50 mm, switches off 24VAC, machine blocked.
S883	3-8/4B	Collision protection switch, risk of collision when tubehead is less than 120 mm from the floor.
S884	3-9/2G	Lift down limit switch, rotating unit.
S890	3-17/3C	AEC in position switch (Wing 1) (Not used).
S891	3-17/3C	Object table locked in position (Wing1).
S894	3-17/4C	Select wing 1 switch.
S895	3-17/4C	Select wing 2 switch.
S896	3-14/4A	Tilt opto-switch. 0 or ±10 .
S897	3-16/2G	Diaphragm switch.
S1	3-17/1A	Grid out switch located in object table 2.
S2	3-17/2A	Grid front switch located in object table 2.
S3	3-17/2A	Grid rear switch located in object table 2.

Potentiometers

Potentiometer	Page	Description
R803	3-14/2A	Tube angle, 2k.
R861	3-12/2E	Preset force, 10k.
R863	3-12/2E	Thickness, 2k.
R871	3-14/2A	Preset angle, 10k.

Motors

Motor	Page	Description
M	3-17/1A	Grid motor, placed in object table with grid.
M1	3-9/2G	Lift motor.
M2	3-13/2G	Compression motor.
M3	3-9/2G	Rotation motor.
M4 :1, :2, :3, :4	3-16/5E	Collimator stepping motor.
M5	3-16/4G	Filter / mirror disk step motor.
M6	3-7/4G	Fan, tube cooling.
M9	3-9/5G	Rotation brake.
M10	3-9/5G	Rotation brake.

Miscellaneous

Misc.	Page	Description
COMP. UNIT	3-12	Compression unit.
GROUND RAIL	3-2/1E	System grounding terminal.
K7	3-7/4E	Fan thermostat.
K8	3-7/4E	Tube overtemperature thermostat.
K9	3-7/4E	Tube housing overpressure switch.
L804 - L805	3-13/2G	VHF choke (EMC)
L806 - L809	3-9/2G	VHF choke (EMC)
LAMP	3-15/5G	Field light lamp.
R805	3-9/5G	Brake resistor, 6.2Ω.
R806	3-9/5G	Brake varistor
R807	3-9/1G	Lift motor varistor.
R860	3-12/2A	Strain gauge (R=300-400 Ω)
T801	3-3/2C	Mains transformer.
T802	3-3/3C	Transformer for PXCM unit (Brick unit)
T803	3-3/3C	Transformer for Opdima system
Z801	3-3/4C	Filter for Opdima system
C801 - C803	3-13/4G	EMC capacitors

This page is intentionally left blank.

LIST OF SIGNALS AND TEST POINTS,STAND

Page	Signal Name	Origin	Via	Destination	Testpoint	LED
3-9/1C	ACT_SPEED	TACHO		D802	ACT_SPEED	
3-17/3C	AEC_POS	S890	D805	D801		
3-10/1A	ANGLE_MEM	D807	D805	D801		
3-12/3B	BR_OPEN	D804			D804.X843 pin 8	V2
3-12/3B	BR_RET	D804			D804.X843 Pin 7	
3-9/4B	⁎BRAKE	D801		D802		
3-9/4E	⁎BRAKE_RET	D802		M9, M10	D802 BRAKE_RET	
3-9/4E	⁎BRAKE_RELAY	D802		D802		
3-9/4E	C_LIM	D802				V11
3-13/2D	C_PWM	D802		M2	D802 C_PWM	
3-17/3C	CASS_LOADED	OBJ. TABLE 1	D805	D801		
3-16/2F	COLL_MOT_INT	D814	D805	D801		
3-16/2D	COLL_MOT_RX					
3-16/2C	COLL_MOT_TX					
3-13/1E	COMP_LIMIT	D802	D805	COMP. UNIT		
3-13/2B	⁎COMP_DIR	D801		D802	D802 COMP_D	
3-12/3C	COMP_FORCE	D804		D801	D804.X843 pin 5	
3-13/3E	COMP_OK	D802		D801		D802 V2 COMP_ERR
3-13/1E	COMP_PROT	D802		D801	D802 COMP_PROT	
3-13/2B	⁎COMP_SPEED	D801		D802	D801, D802 COMP_SP	
3-13/4F	COMPRESS	PEDAL	D805	D801, D802		
3-9/2D	D_PWM	D802			D802 D_PWM	
3-13/1E	DECOMP_ LIMIT	D802	D805	COMP. UNIT		
3-13/5F	DECOMPRESS	PEDAL / **		D801, D805		
3-9/3B	⁎DIR	D801		D802	D802 DIR	
3-9/3F	DRIVE_OK	D802		D801		D802 V24DRIVE_ERR
3-9/1E	DRIVE_PROT	D802		D801	D802 DRIVE_PROT	
3-16/1G	EXT_COLL	S897	D805	D801		
3-16/2F	FILT_MOT_INT	D814	D805	D801		
3-16/2D	FILT_MOT_RX					
3-16/2C	FILT _MOT_TX					
3-16/4G	FM OUT 1A	D814		M5		
3-16/4G	FM OUT 1B	D814		M5		
3-16/4G	FM OUT 2A	D814		M5		
3-16/4G	FM OUT 2B	D814		M5		

"⁎SIGNAL" = "SIGNAL" active low
**plus decompression button on control console S3.

LIST OF SIGNALS AND TEST POINTS, STAND

Signal Name	Description
ACT_SPEED	Test point for frequency to voltage converted tacho signal.
AEC_POS	AEC-detector in position near breast (not used).
ANGLE_MEM	Operator control signal for preset stop angle.
BR_OPEN	Bridge open, compression force strain gauge not working correctly.
BR_RET	Compression force strain guage return line (appr. 0V).
*BRAKE	Control signal to brake reversing relay.
*BRAKE_RET	Output to the brakes for max or min braking when active.
∗BRAKE RELAY	Output to brake reversing relay, max brake if ∗BRAKE_RET active.
C_LIM	Rotation and fast-acting current limit.
C_PWM	Pulse Width Modulated power output to compression motor.
CASS_LOADED	Cassette inserted in object table 1 (not used).
COLL_MOT_INT	Collimator motor interrupt signal.
COLL_MOT_RX	Collimator motor receive signal.
COLL_MOT_TX	Collimator motor transmit signal.
COMP_LIMIT	Power output via compression limit switch to compression motor.
∗COMP_DIR	Controls compression motor to compress (moving down).
COMP_FORCE	Analog signal indicating compression force.
COMP_OK	Compression motor working correctly, no over current.
COMP_PROT	Compression relay K4 is working correctly, checked 1s after pedal release.
∗COMP_SPEED	Pulse Width Modulated signal to control speed of compression motor (20kHz).
COMPRESS	Operator control signal to move compression plate down.
D_PWM	Pulse Width Modulated power output to rotation or lift motor.
DECOMP_LIMIT	Power output via decompression limit switch to compression motor.
DECOMPRESS	Operator control signal to move compression plate up.
∗DIR	Selecting direction of rotation or lift motor.
DRIVE_OK	Rotation and lift motor are working correctly, no over current, approx. 1.5 s delay.
DRIVE_PROT	DMG relay K6 is working correctly, checked 3s after rot/lift button is released.
EXT_COLL	External diaphragm switch, diaphragm in place.
FILT_MOT_INT	Filter motor interrupt signal.
FILT_MOT_RX	Filter motor receive signal.
FILT _MOT_TX	Filter motor transmitt signal.
FM OUT 1A	Filter / Mirror disk step motor M5.
FM OUT 1B	Filter / Mirror disk step motor M5.
FM OUT 2A	Filter / Mirror disk step motor M5.
FM OUT 2B	Filter / Mirror disk step motor M5.

LIST OF SIGNALS AND TEST POINTS, STAND

Page	Signal Name	Origin	Via	Destination	Testpoint
3-6/3B	GEN_PREP_RDY (VH)	D750		D801	
3-17/2A	GRID_FRONT	OBJ.TABLE 2	D805	D801	
3-17/4D	GRID_MOTOR_N	D802	D805	OBJ. TABLE	D802 GRID_M
3-17/2E	GRID_OUT	OBJ. TABLE	D805	D801	D801 GRID_O
3-6/2B	GRID_RUNNING (AR)	D801		D750	D801 AR
3-17/2A	GRID_REAR	OBJ.TABLE 2			
3-17/3G	∗GRID_SPEED	D801		D802	D801 GRID_SP
3-12/3D	I1_OUT	D804			D804.X843 pin 6
3-7/4D	K8_TEMP	TUBE/K8		D750	
3-7/4D	K9_PRESS	TUBE/K9		D750	
3-15/2A	LAMP	D807	D805	D801	
3-15/4C	∗LAMP_CTRL	D801		D802	
3-15/5F	LAMP_V	D802		LAMP	D802 LAMP
3-8/3D	LED	D802		TACHO switch	
3-10/3E	LIFT_DOWN	D807, D808	D805	D801, D802	
3-10/3E	LIFT_UP	D807, D808	D805	D801, D802	
3-15/4F	∗MIRROR_MAGNET	D802			D802 MIRROR
3-6/3B	MPS	D801		D750	D801 MPS
3-16/5C	OUT 1A	D814		M4:1, :2, :3, :4	
3-16/5C	OUT 1B	D814		M4:1, :2, :3, :4	
3-16/5C	OUT 2A	D814		M4:1, :2, :3, :4	
3-16/5C	OUT 2B	D814		M4:1, :2, :3, :4	
3-9/2C	PGM_SPEED	D802			D802 PGM_SPEED
3-14/2D	POT_RETURN	POT	D805	D801	
3-12/2E	PRES_FORCE	R861		D801	
3-14/1A	PRESET_ANGLE	R871	D805	D801	

“∗SIGNAL” = “SIGNAL” active low

LIST OF SIGNALS AND TEST POINTS, STAND

Signal Name	Description
GEN_PREP_RDY (VH)	The stand is informed that the generator has completed its preparation.
GRID_FRONT	Active when the grid is in front position.
GRID_MOTOR_N	Grid motor return line.
GRID_OUT	Active when the grid is not in end position.
GRID_RUNNING (AR)	Signal given to Master Board D750 as exposure request. If grid used, grid has started.
GRID_REAR	Active when the grid is in rear position.
∗GRID_SPEED	Pulse Width Modulated signal control speed of grid motor.
I1_OUT	Output signal from compression force preamplifier.
K8_TEMP	Signal from temperature switch K8 on the tube.
K9_PRESS	Signal from the over pressure switch K9 on the tube.
LAMP	Operator control signal for the field light lamp.
∗LAMP_CTRL	Signal to switch on the field light lamp.
LAMP_V	Output to the field light lamp.
LED	Output to the LED in the tacho opto switch in the rotation motor.
LIFT_DOWN	Operator control signal to move compression plate down.
LIFT_UP	Operator control signal to move compression plate up.
∗MIRROR_MAGNET	Output to mirror magnet. Enabled via ∗LAMP_CTRL. (not used)
MPS	Multi processor serial communication for information exchange Master - Slaves.
OUT 1A	Collimator stepping motor M4:1, M4:2, M4:3, M4:4.
OUT 1B	Collimator stepping motor M4:1, M4:2, M4:3, M4:4.
OUT 2A	Collimator stepping motor M4:1, M4:2, M4:3, M4:4.
OUT 2B	Collimator stepping motor M4:1, M4:2, M4:3, M4:4.
PGM_SPEED	Test point for duty cycle to voltage converted programmed speed signal.
POT_RETURN	Return line for potentiometers connected to 0VA via a 20Ω resistor.
PRES_FORCE	Analog signal as preset value for maximum compression force.
PRESET_ANGLE	Analog signal as preset value for requested rotation angle.

LIST OF VOLTAGES AND TEST POINTS, STAND

Page	Signal Name	Origin	Via	Destination	Testpoint	LED
3-13/2D	PU	D802			D802 PU	
3-16/5C	QUAD A	D814		M4:1, :2, :3, :4		
3-16/5C	QUAD B	D814		M4:1, :2, :3, :4		
3-9/4B	⁎RELEASE	D801		D802	D802 RELEASE	
3-6/1E	⁎RESET	D801				
3-16/2C	RESET	D801		D805		
3-6/1E	⁎RESET_HW	D801				
3-6/1E	RESET_SW	D801				
3-10/3A	ROT_CW	D807, D808	D805	D801, D802		
3-10/3A	ROT_CCW	D807, D808,	D805	D801, D802		
3-6/3D	RXD	D801			D801 RXD	
3-9/3B	⁎SEL_ROT	D801		D802	D802 SEL_ROT	
3-17/4C	SELECT_WING1⁎⁎	S891, S894	D805	D801		
3-17/4C	SELECT_WING2	S895	D805	Object table 1		
3-16/1D	SMART_RX				D805 SMART_RX	
3-16/2B	SMART_RX_				D801 SMART_RX_	
3-16/1F	SMART_TX				D805 SMART_TX	
3-9/2B	⁎SPEED	D801		D802	D801, D802 SPEED	
3-6/2B	STAND_REQ_HV_OFF (*KVA)	D801		D750	D801 *KVA	
3-17/4C	STEREO_LEVER	S860	D805	D801		
3-17/1B	TABLE_CONFIG_0...3	OBJ.TABLE	D805	D801		
3-8/3D	TACHO	Tacho switch		D802	D802 TACHO	
3-12/2E	THICKNESS	R863		D801		
3-12/3F	THICKNESS_B	THICKNESS		D801		
3-12/3E	THICKNESS_STE-REO	D801		X885		
3-14/4C	TILT	S896/D810	D805	D801		D810 V8
3-14/2A	TUBE_ANGLE	R803	D805	D801		
3-6/4D	TXD	D801		D750	D801 TXD	
3-12/3C	ZERO	D804			D804.X843 pin 4	

"*SIGNAL" = "SIGNAL" active low.
** = Not used

LIST OF VOLTAGES AND TEST POINTS, STAND

Signal Name	Description
PU	Pull up signal for error comparators = +15V, +5V, +24V voltages OK.
QUAD A	Collimator stepping motor M4:1, M4:2, M4:3, M4:4.
QUAD B	Collimator stepping motor M4:1, M4:2, M4:3, M4:4.
⁎RELEASE	Control signal to release the brakes from min or max to permanent magnet braking.
*RESET	Reset signal to the CPU.
RESET	Reset signal to the smart point interface.
*RESET_HW	Reset signal from the CPU to the reset cicuit, caused by slave restart and CPU watchdog reset.
RESET_SW	Signal from the reset switch to the CPU via the reset circuit.
ROT_CW	Operator control signal to rotate the x-ray system clockwise.
ROT_CCW	Operator control signal to rotate the x-ray system counter clockwise.
RXD	Input for receiving data via MPS.
⁎SEL_ROT	Low level signal selects the rotation drive to be controlled.
SELECT_WING1	Signal from select wing 1 switch. Wing 1 selected (not used).
SELECT_WING2	Signal from select wing 2 switch. Wing 2 selected.
SMART_RX	Smart point transmit signal.
SMART_RX_	Smart point receive signal.
SMART_TX	Smart point receive signal.
⁎SPEED	Pulse Width Modulated signal to control speed of rotation or lift motor (20 kHz).
STAND_REQ_HV_OFF (*KVA)	Signal to terminate exposure. WIRED-OR line, see Master board D750.
STEREO_LEVER	Signal from stereo lever switch, indicating lever not in stereo position.
TABLE_CONFIG	4 inputs from object table, see table configuration .
TACHO	Signal from rotation motor tachometer.
THICKNESS	Analog signal indicating the compression thickness.
THICKNESS_B	Buffered output to the thickness adapter. (used with Opdima)
THICKNESS_STEREO	Isolated analog signal indicating compression thickness for stereo evaluation unit.
TILT	Indicates that the stereo angle is 0 or ±10 . Visible through vent opening behind tube.
TUBE ANGLE	Analog signal indicating the rotation angle.
TXD	Output for sending data via MPS.
ZERO	Used for adjusting offset of the compression force amplifiers.

LIST OF VOLTAGES AND TEST POINTS, STAND

Page	Voltage	Origin	Supplied from	Supply for	Test	LED	Fuse
3-3/4E	+5V	D801	11V	Digital IC, +5V_REF	5V	V7	D801/F1 F801
3-3/4F 3-12/3C	+5V_REF	D801	+5V	Pots. D804	5V_REF X843 pin 2		D801/F1 F801
3-3/3E	+5V_DSP	D801	11V	D803, Display	5V_DSP	V6	D801/F1 F801
3-3/2E 3-12/3B	+7V	D801	11V	Analog IC, D804	7V X843 pin1	V5	D801/F1 F801
3-6/4D	+5V_MPS	D801	11V_MPS	Generator interface	5V_MPS	V26	D801/F2 F802
3-3/3D	0VD	GND	D801/X811	Digital IC	0VD1,OVD2		
3-3/3D 3-12/3B	0VA	0VD	D801	Analog IC D804	0VA1 X843 pin 3		
3-6/5D	0V_MPS	D750/GND		Generator interface ground	D801 MPS		
3-3/2C	11V	T801	230VAC	+5V, +5V_DSP, +7V			D801/F1 F801
3-6/5B	11V_MPS	T801	230VAC	+5V_MPS			D801/F2 F802
3-4/4D	+5V	D802	14VAC	Digital IC	5V	V57	D802/F1 F803
3-4/4E	+5V_M	D802	+5V	D801-D802 opto interface		V57	D802/F1 F803
3-2/5C	0V_W	D801	D805/X856	Optointerface			
3-2/4C	0V_M	D801	D802/X822	Optointerface			
3-4/3D	+14V	D802	14VAC	+5V, D805	14V		D802/F1 F803
3-4/2D	+15V	D802	+24VF	Transistor drivers M1,M3	15V	V16	D802/F2
3-4/2C	+24V	D802	24VAC	+15V			D802/F3 F805
3-4/2D	+24VF	D802	+24V	Switches, relays, etc	24VF		D802/F2
3-4/3A	14VAC	T801	230VAC	+14V			D802/F1 F803
3-15/5B	17VAC	T801	230VAC	LAMP	17VACF		D802/F5 F804
3-15/4E	17VACF	D802	17VAC	LAMP	17VAC_RET		D802/F5 F804
3-15/4D	0V_L	D802	D802	Lamp control			
3-15/5D	-V_L	D802	17VACF	Lamp control			
3-4/2A	24VAC	T801	230VAC				D802/F3 F805
3-4/2E	24VACF	D802	24VAC	Fan			D802/F4
3-4/3D	0V	GND	D802/X821	Ground	0V, 0V1		
3-4/G2	+5V	D805	D802/+14V	Digital IC	5V	V17	D802/F1 F803
3-4/2G	+12V	D805	+14V	V_MOT D814	12V		D802/F1 F803
3-4/2G	+5V_SP	D805	D802/+14V	Digital IC	5V_SP		D802/F1 F803
3-4/2G	8,2V_SP	D805	D802/+14V	Digital IC	8,2V_SP		D802/F1 F803

LIST OF VOLTAGES AND TEST POINTS, STAND

Voltage	Description (typical value)
+5V	Regulated DC voltage, 4.75V < +5V < 5.25V
+5V_REF	DC voltage, +5V -5% < +5V_REF < +5V
+5V_DSP	Regulated DC voltage, 4.75V < +5V_DSP < 5.25V
+7V	Regulated DC voltage, 6.60V<+7V<7.25V
+5V_MPS	Regulated DC voltage, 4.75V < +5V_MPS < 5.25V
0VD	Digital ground
0VA	Analog ground
0V_MPS	Generator interface ground.
11V	AC supply voltage, 11VAC [1) 2)]
11V_MPS	AC supply voltage, 11VAC [1) 2)]
+5V	Regulated DC voltage, 4.75V < +5V < 5.25V
+5V_M	Regulated DC voltage, 4.75V < +5V_M < 5.25V
0V_W	Digital ground optointerface D801 - D805
0V_M	Digital ground optointerface D801 - D802
+14V	Unregulated DC voltage, 18V [1)]
+15V	Regulated DC voltage, 14.25V < +15V < 15.75V
+24V	Unregulated DC voltage, 32V [1)]
+24VF	Unregulated DC voltage, 32V [1)]
14VAC	AC supply voltage, 14 VAC [1) 2)]
17VAC	AC supply voltage, 17 VAC [1) 2)]
17VACF	AC supply for lamp [1)2)]
0V_L	Floating ground for LAMP voltage regulation [1)2)]
-V_L	Unregulated supply voltage for lamp control circuit [1)2)]
24VAC	AC supply voltage, 24VAC [1) 2)]
24VACF	AC supply voltage for the fan [1) 2)]
0V	Circuit ground
+5V	Regulated DC voltage, 4.75V < +5V < 5.25V
+5V_R	Regulated DC voltage, 4.40V < +5V_R < 5.25V
+5V_SP	Regulated DC voltage, 4.85V < +5V < 5.15V
8.2V_SP	Regulated DC voltage, 7.8V < +8.2V < 8.6V

[1)] Standby typical value

[2)] Floating voltage. Measure differentially.

LIST OF VOLTAGES AND TEST POINTS, STAND

NOTE	For incoming mains voltage, see page 4-1.

BLOCK DIAGRAM CABLE CONNECTIONS

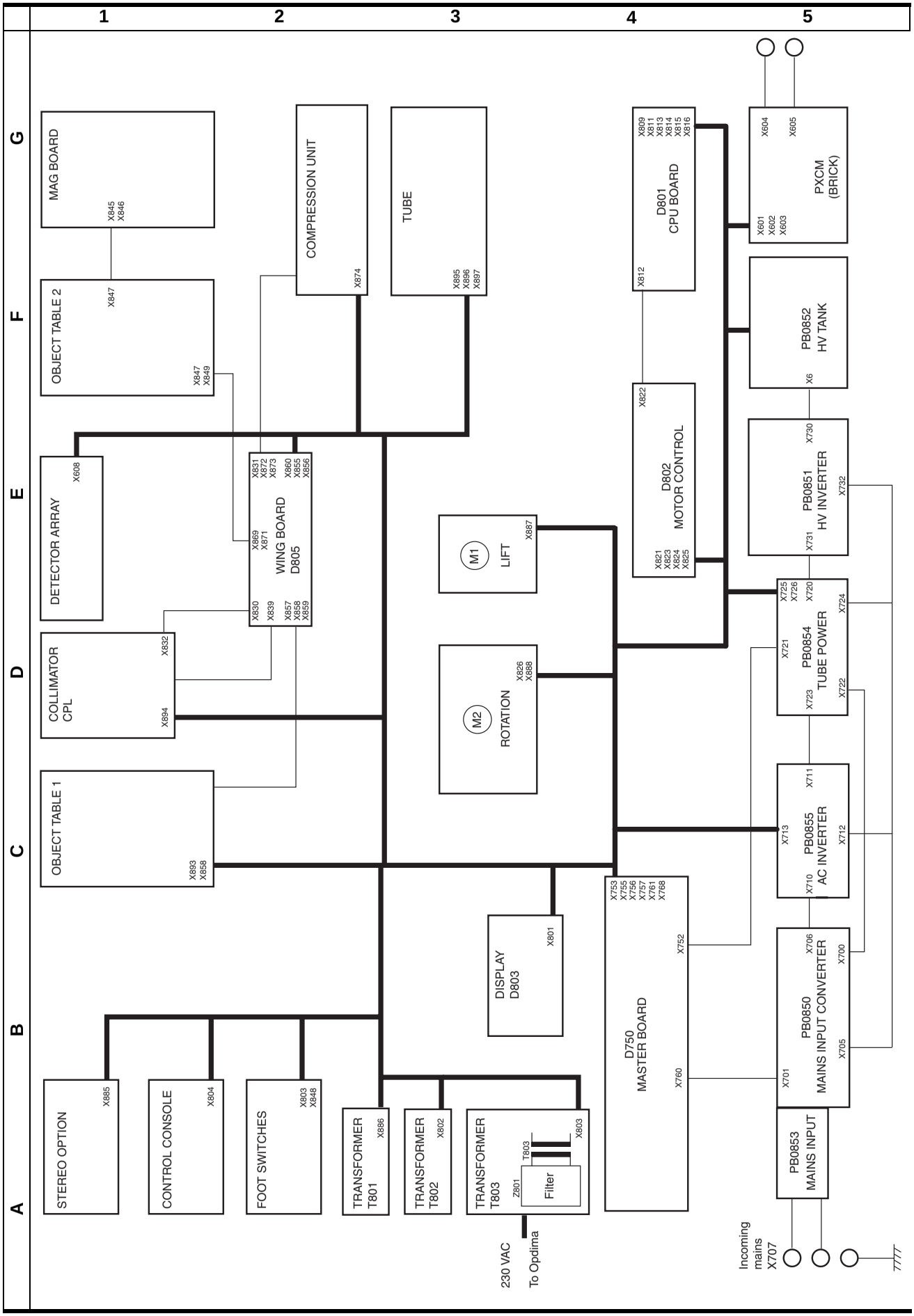

GROUNDING CONNECTIONS

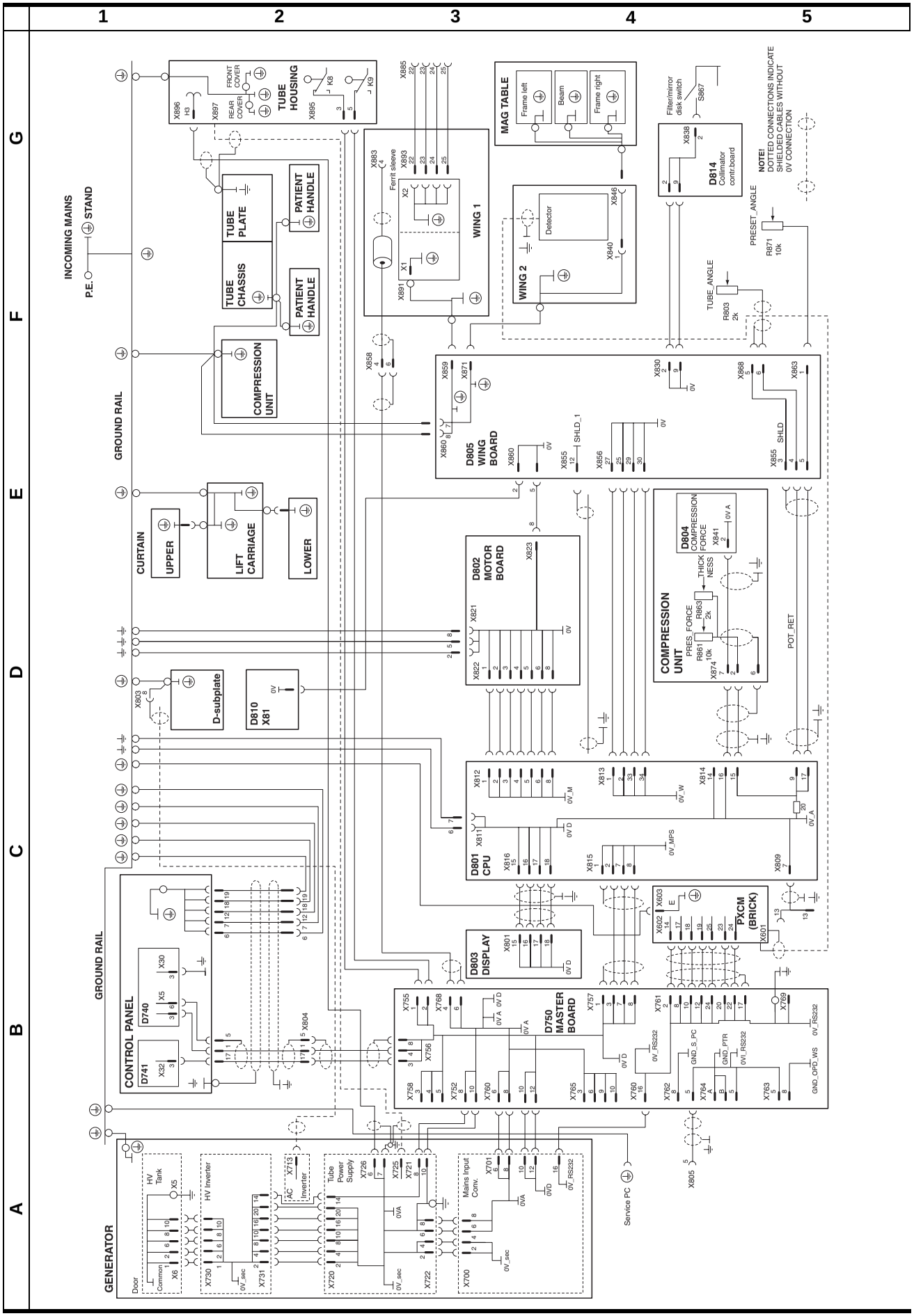

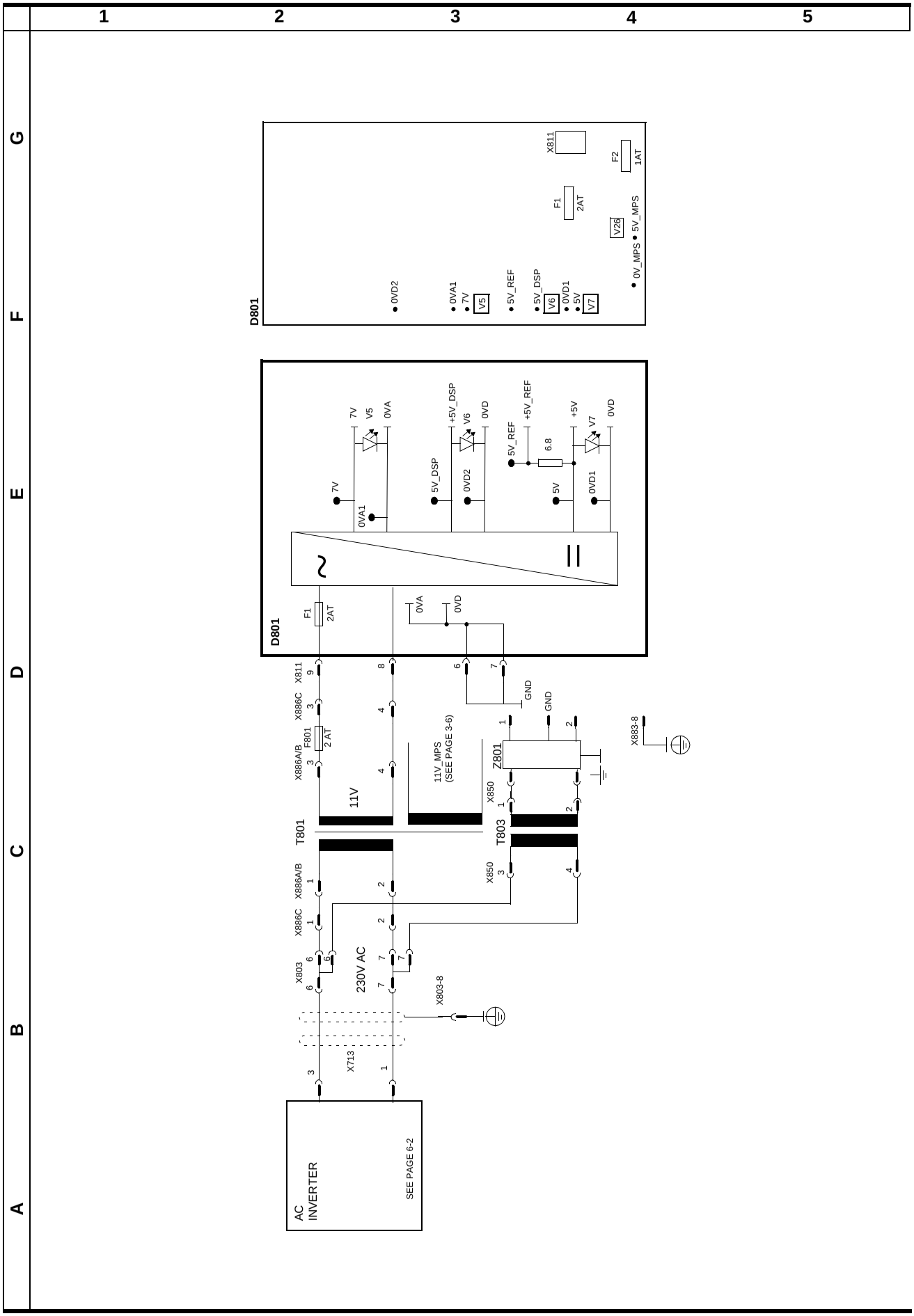
1
2
3
4
5
A
B
C
D
E
F
G
D801
X811
F2
1AT
F1
2AT
V26
0V_MPS
5V_MPS
0VD2
0VA1
7V
V5
5V_REF
5V_DSP
V6
0VD1
5V
V7
D801
F1
2AT
0VA
0VD
7V
V5
0VA
+5V_DSP
V6
0VD
5V_REF
+5V_REF
6.8
+5V
V7
0VD
5V_DSP
0VD2
5V
0VD1
0VA1
GND
GND
X811
X886C
X886A/B
F801
2 AT
11V
11V_MPS
(SEE PAGE 3-6)
Z801
X883-8
X850
T801
T803
X886A/B
X886C
X803
230V AC
X803-8
X713
AC
INVERTER
SEE PAGE 6-2

POWER SUPPLY MOTOR CONTROL

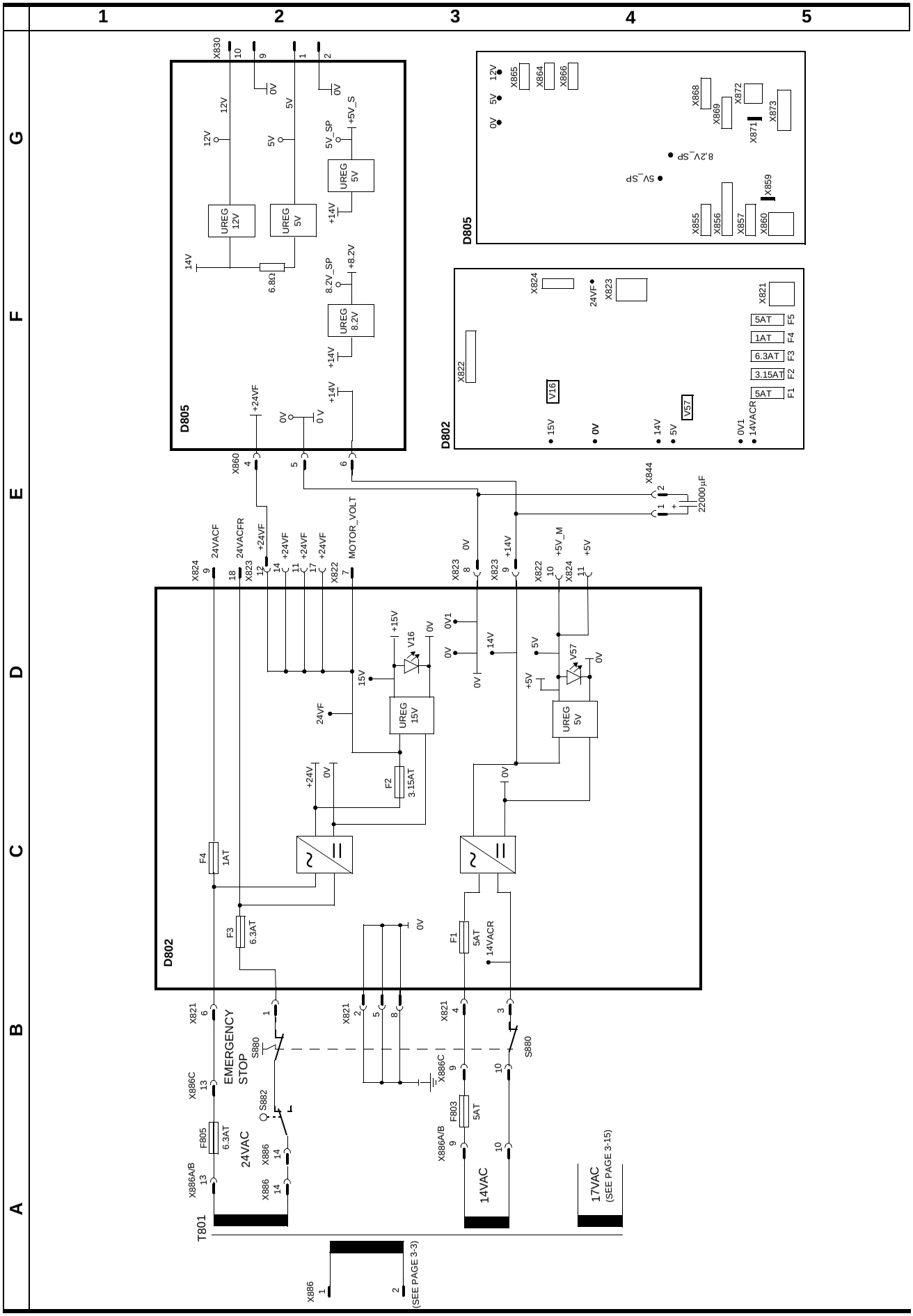

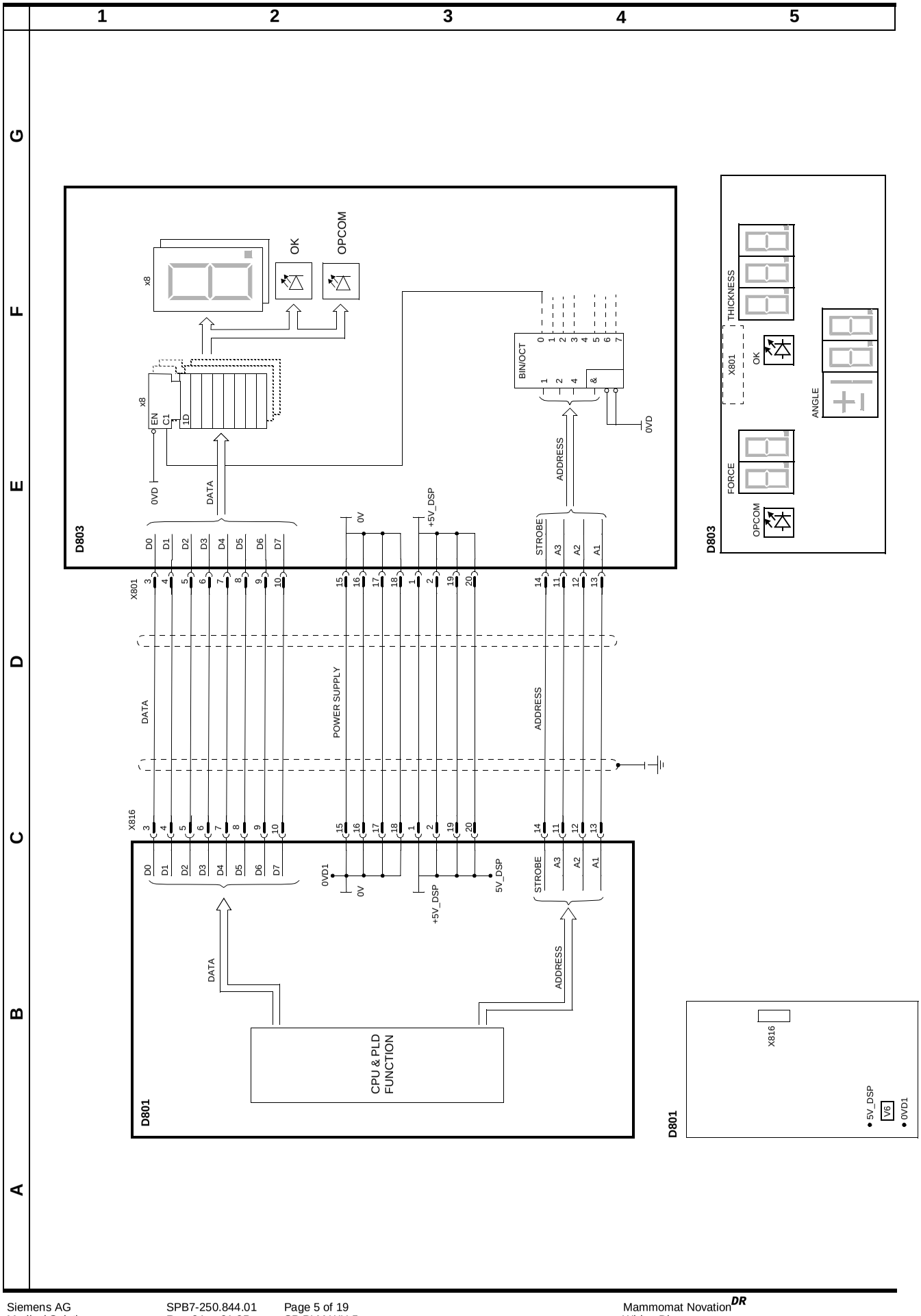
1
2
3
4
5
A
B
C
D
E
F
G
D803
x8
OK
OPCOM
x8
EN
C1
1D
0VD
DATA
BIN/OCT
0
1
2
3
4
5
6
7
1
2
4
&
ADDRESS
0VD
D0
D1
D2
D3
D4
D5
D6
D7
0V
+5V_DSP
STROBE
A3
A2
A1
X801
X816
DATA
POWER SUPPLY
ADDRESS
D801
0VD1
0V
+5V_DSP
5V_DSP
CPU & PLD
FUNCTION
D803
FORCE
OPCOM
X801
OK
THICKNESS
ANGLE
D801
X816
5V_DSP
V6
0VD1

CPU BOARD INTERNAL, MASTERBOARD INTERFACE

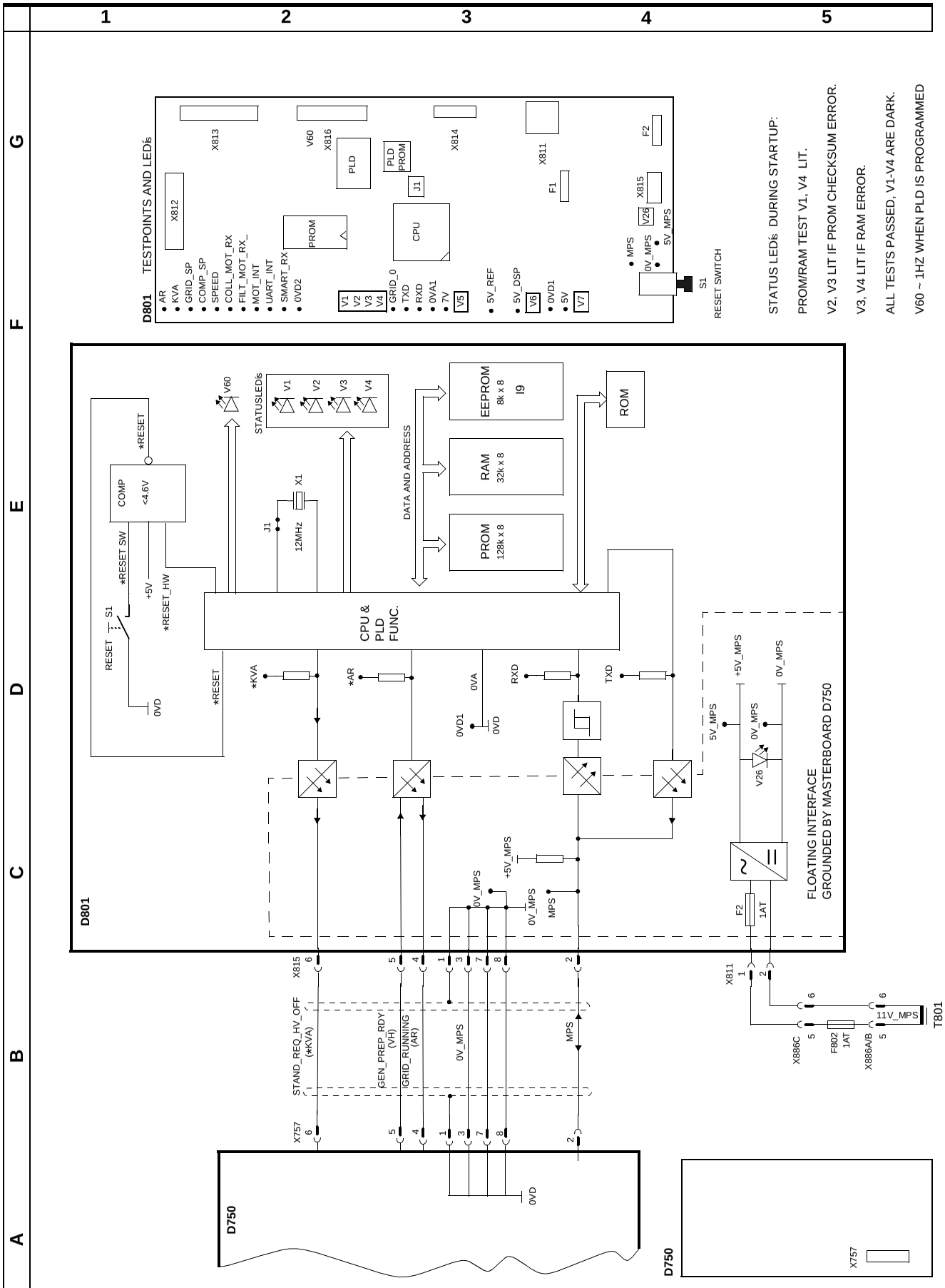

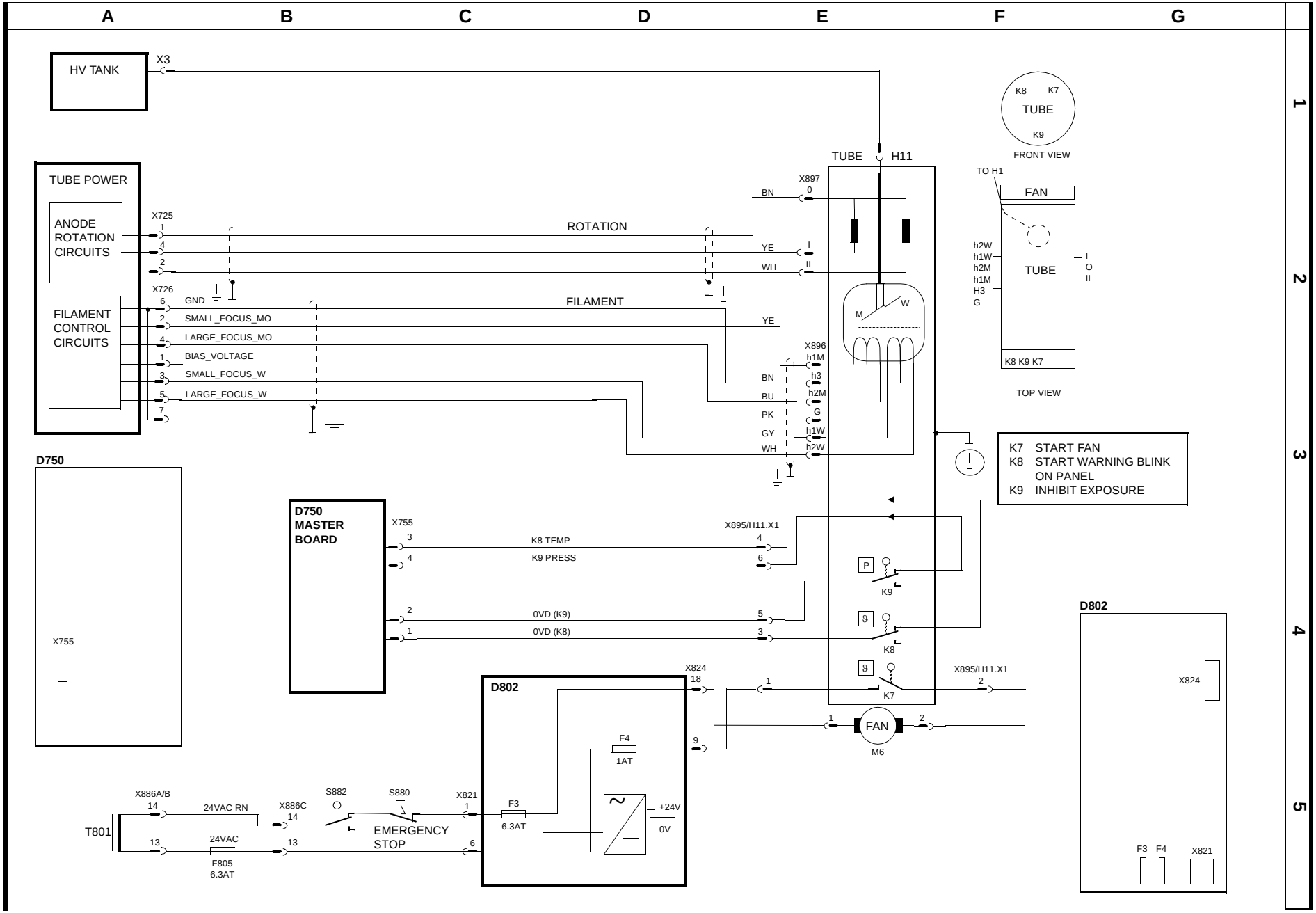
A B C D E F G
1 2 3 4 5
HV TANK
X3
TUBE POWER
ANODE ROTATION CIRCUITS
FILAMENT CONTROL CIRCUITS
X725
X726
ROTATION
FILAMENT
GND
SMALL_FOCUS_MO
LARGE_FOCUS_MO
BIAS_VOLTAGE
SMALL_FOCUS_W
LARGE_FOCUS_W
TUBE H11
X897
BN
YE
WH
X896
h1M
h3
h2M
G
h1W
h2W
BU
PK
GY
M
W
K8 K7
TUBE
K9
FRONT VIEW
TO H1
FAN
h2W
h1W
h2M
h1M
H3
G
I
O
II
K8 K9 K7
TOP VIEW
K7 START FAN
K8 START WARNING BLINK ON PANEL
K9 INHIBIT EXPOSURE
D750
X755
D750 MASTER BOARD
X755
K8 TEMP
K9 PRESS
0VD (K9)
0VD (K8)
X895/H11.X1
P
K9
K8
K7
FAN
M6
D802
X824
F4
1AT
F3
6.3AT
+24V
0V
X821
X886A/B
24VAC RN
X886C
S882
S880
EMERGENCY STOP
T801
24VAC
F805
6.3AT
D802
X824
F3 F4
X821

LIFT AND ROTATION

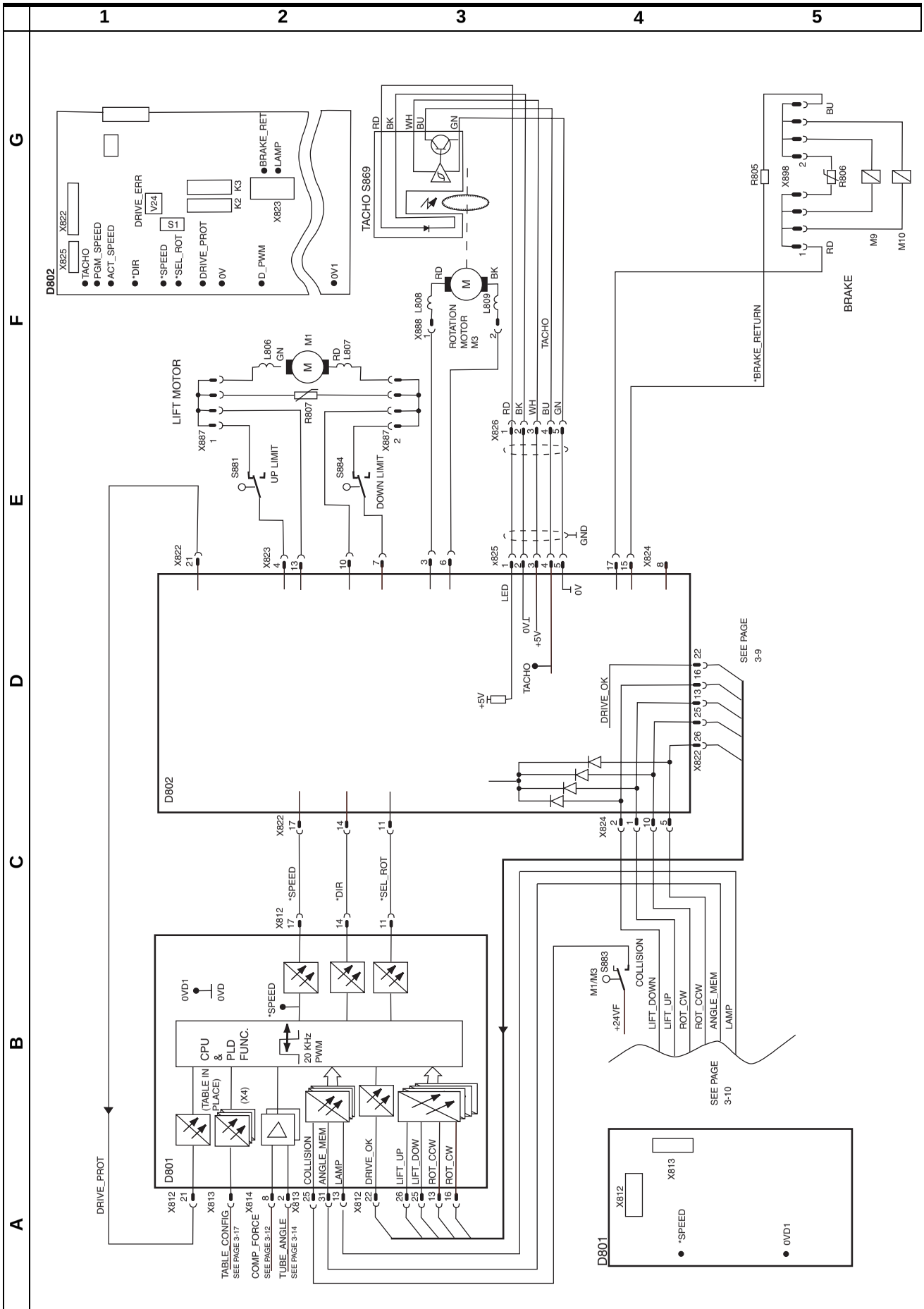

LIFT AND ROTATION MOTOR DRIVE

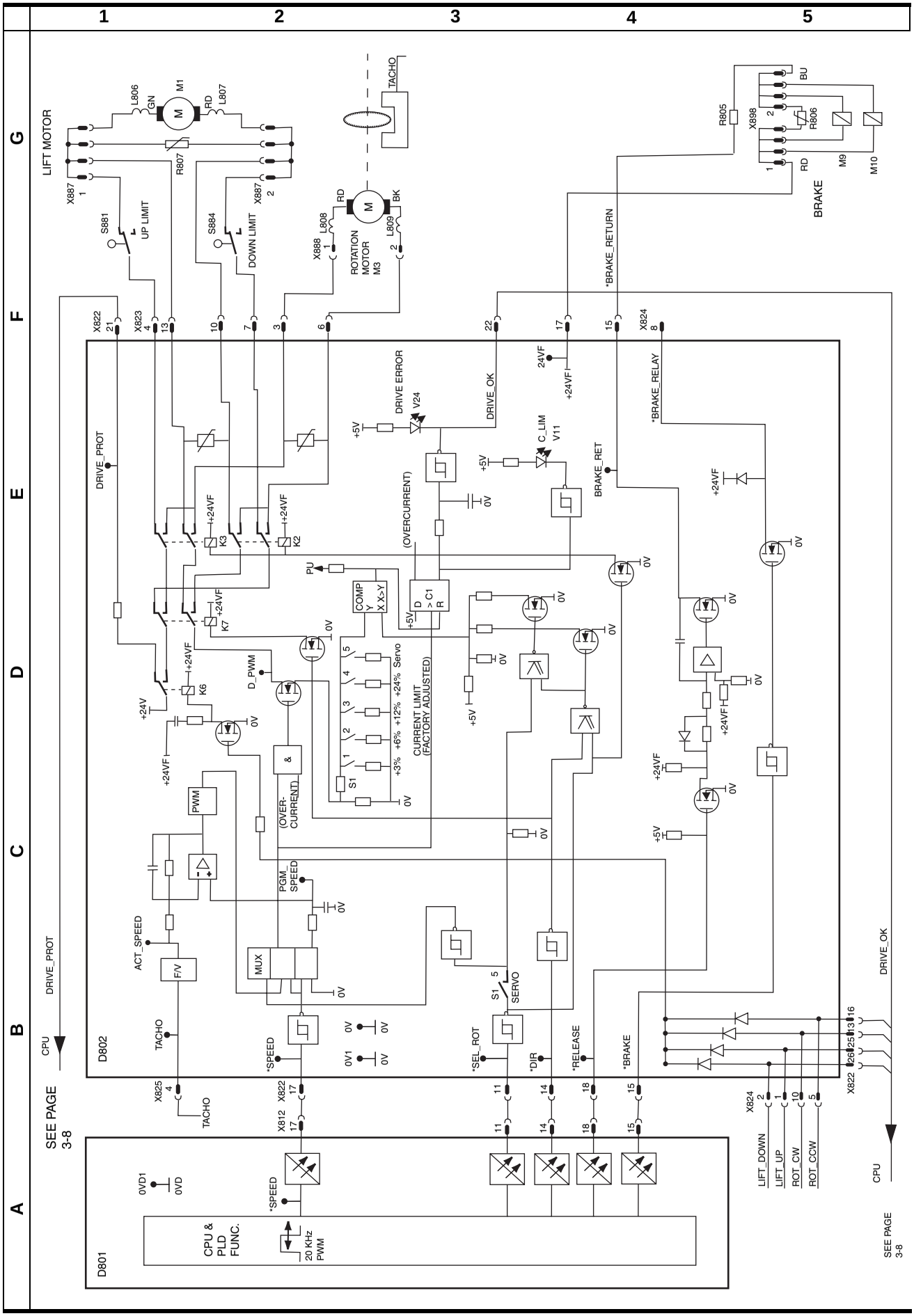

LIFT AND ROTATION SWITCHES

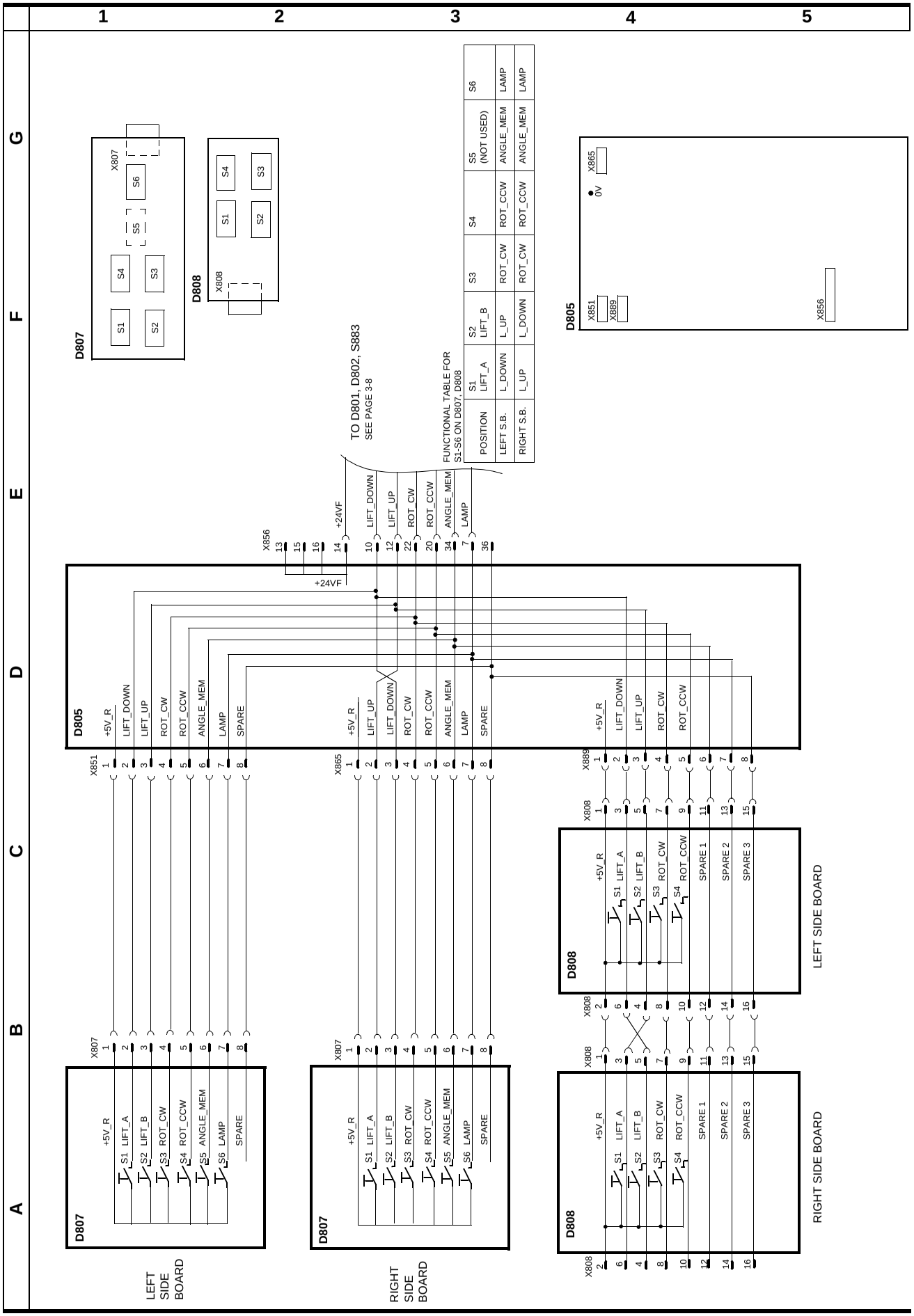

	1	2	3	4	5
G					
F					
E					
D					
C					
B					
A					

This page is intentionally left blank.

COMPRESSION MEASUREMENT SIGNALS

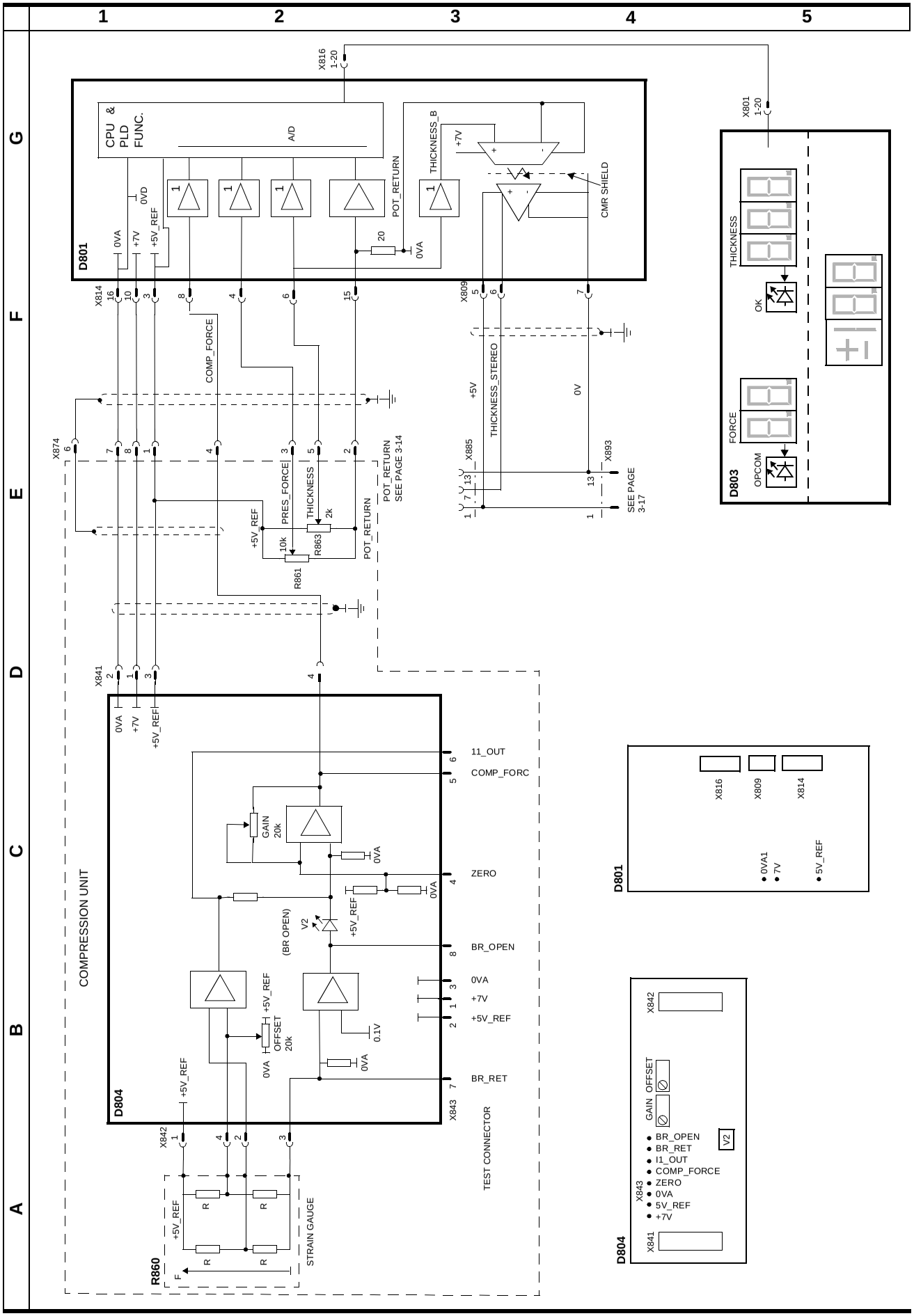

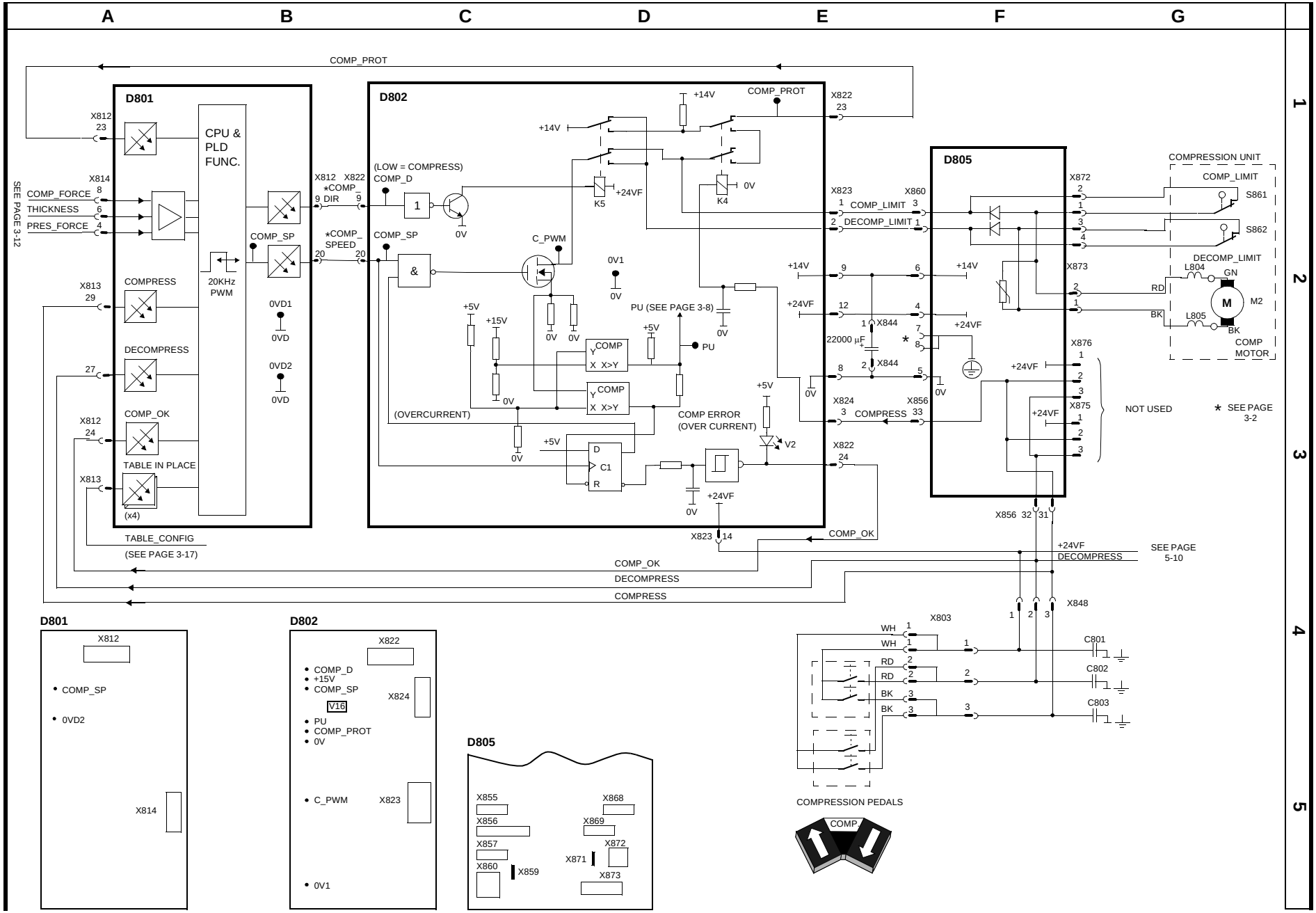
A
B
C
D
E
F
G
1
2
3
4
5
COMP_PROT
D801
CPU & PLD FUNC.
20KHz PWM
COMP_FORCE
THICKNESS
PRES_FORCE
COMPRESS
DECOMPRESS
COMP_OK
TABLE IN PLACE
(x4)
X812 23
X814 8
X813 29
27
X812 24
X813
SEE PAGE 3-12
X812 X822
*COMP_ DIR
*COMP_ SPEED
COMP_SP
0VD1
0VD
0VD2
0VD
TABLE_CONFIG
(SEE PAGE 3-17)
D802
(LOW = COMPRESS)
COMP_D
COMP_SP
C_PWM
+14V
+24VF
K5
K4
0V
0V1
+5V
+15V
COMP
X>Y
PU (SEE PAGE 3-8)
PU
(OVERCURRENT)
COMP ERROR
(OVER CURRENT)
D
C1
R
V2
X822 23
X823 14
X822 24
X823
X860
COMP_LIMIT
DECOMP_LIMIT
X844
22000 µF
X824
X856
COMPRESS
D805
X872
X873
X876
X875
NOT USED
COMPRESSION UNIT
COMP_LIMIT
S861
S862
DECOMP_LIMIT
L804
L805
GN
RD
BK
M
M2
COMP MOTOR
* SEE PAGE 3-2
X856 32 31
+24VF
DECOMPRESS
SEE PAGE 5-10
X848
X803
WH
RD
BK
C801
C802
C803
COMPRESSION PEDALS
COMP.
D801
X812
COMP_SP
0VD2
X814
D802
X822
COMP_D
+15V
COMP_SP
V16
X824
PU
COMP_PROT
0V
C_PWM
X823
0V1
D805
X855
X856
X857
X860
X859
X868
X869
X872
X871
X873

TUBE ANGLE MEASUREMENT, POT. RETURN, TILT SIGNALS

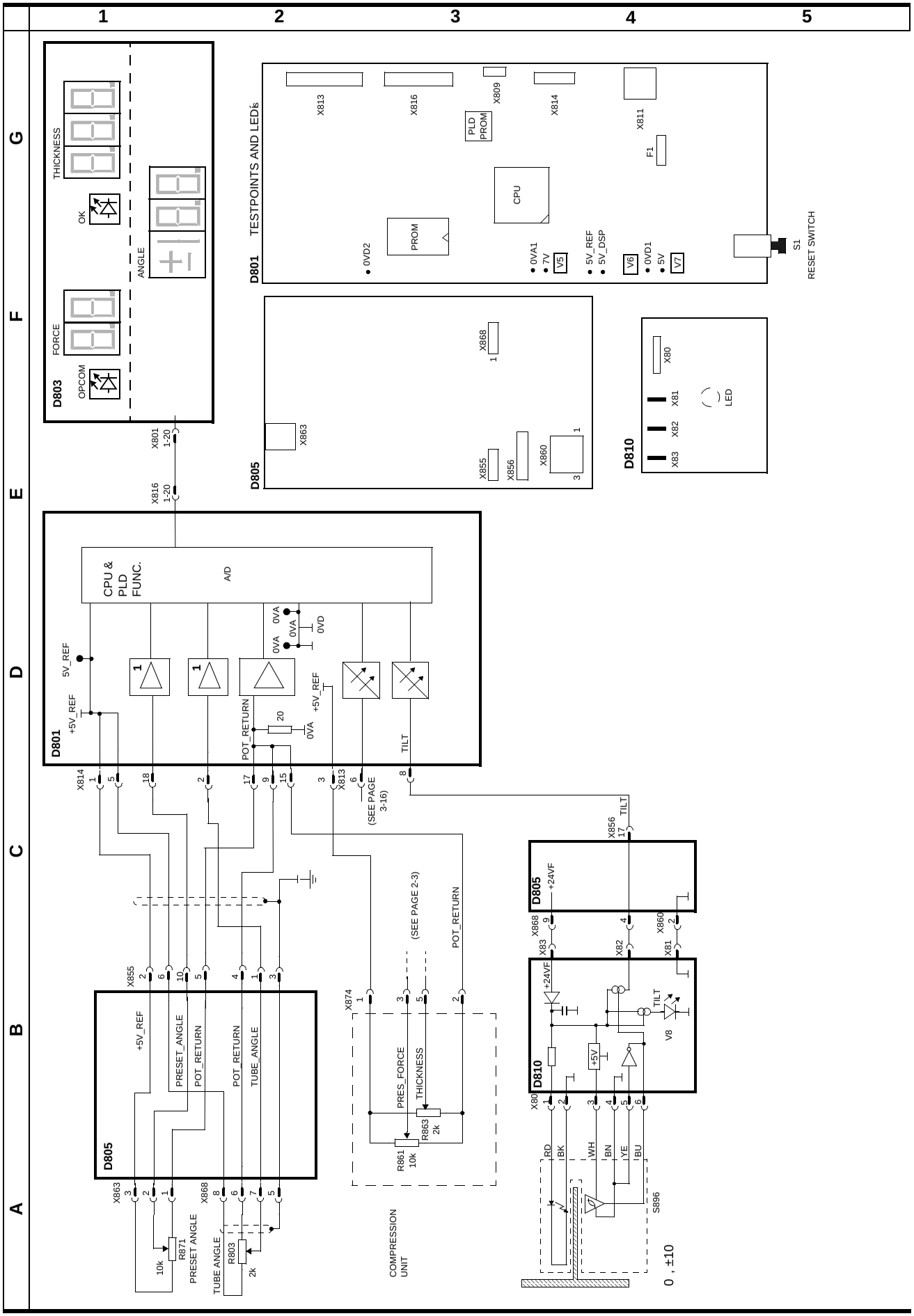

COLLIMATOR 1

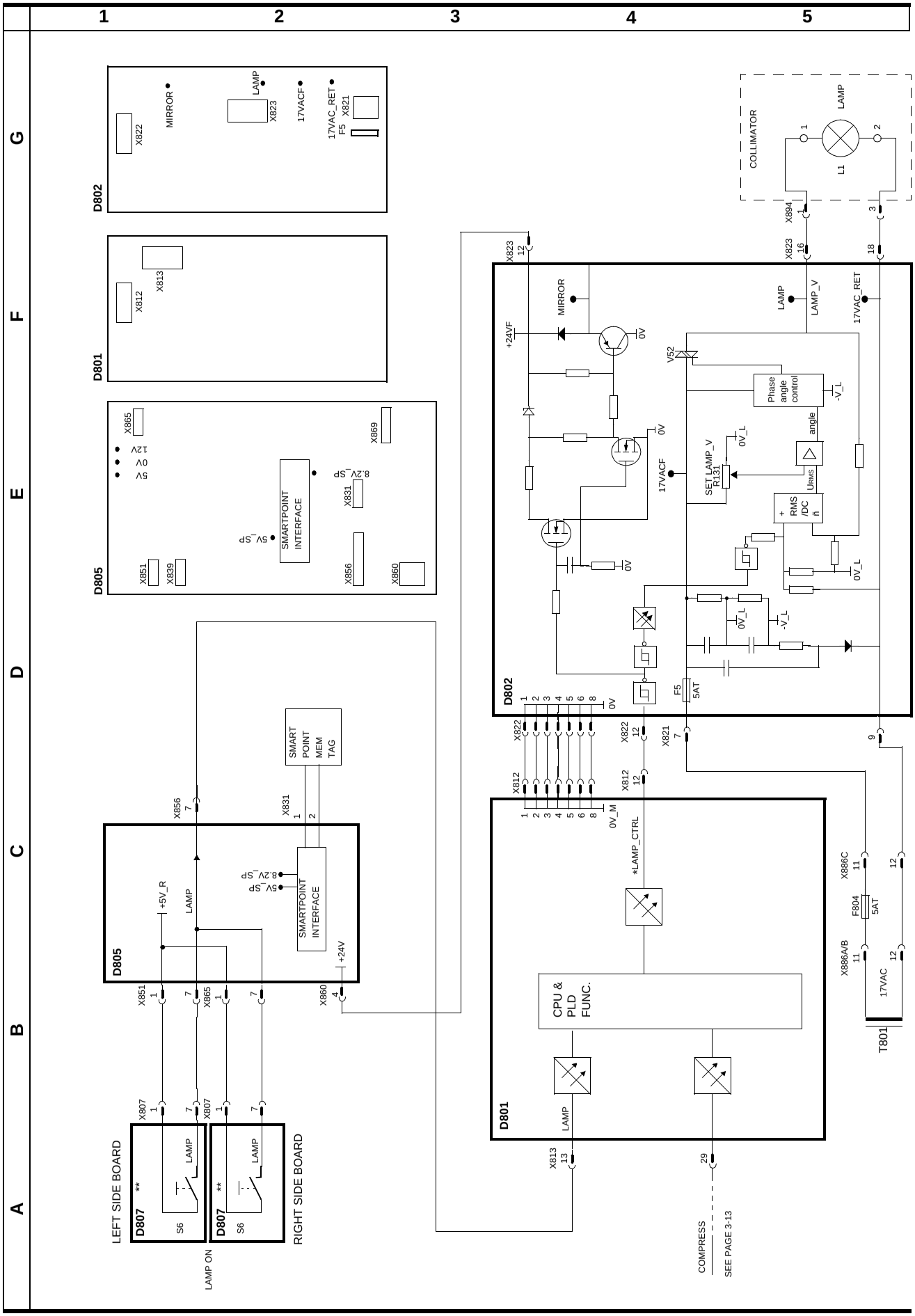

COLLIMATOR 2

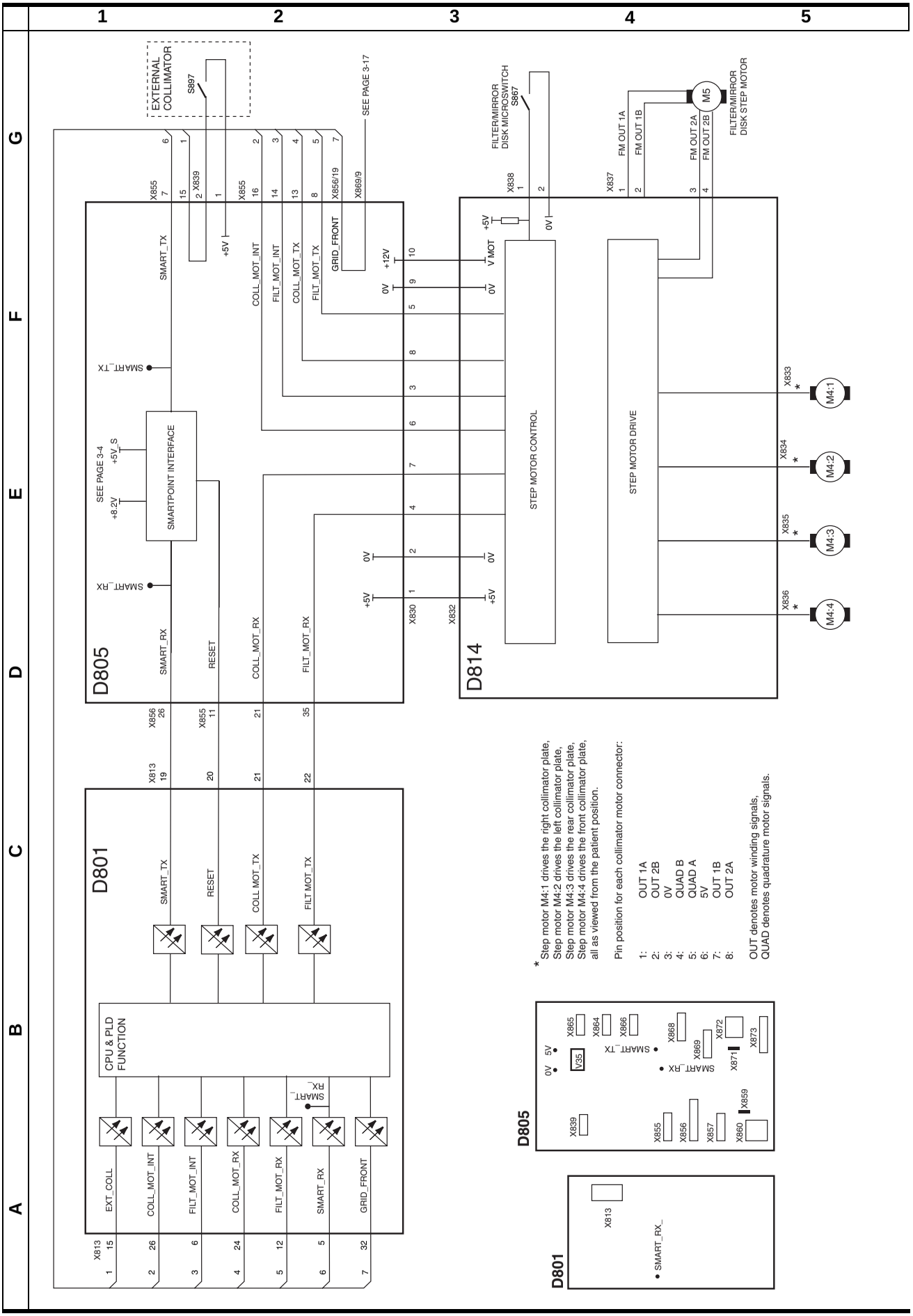

OBJECT TABLE 1 + 2

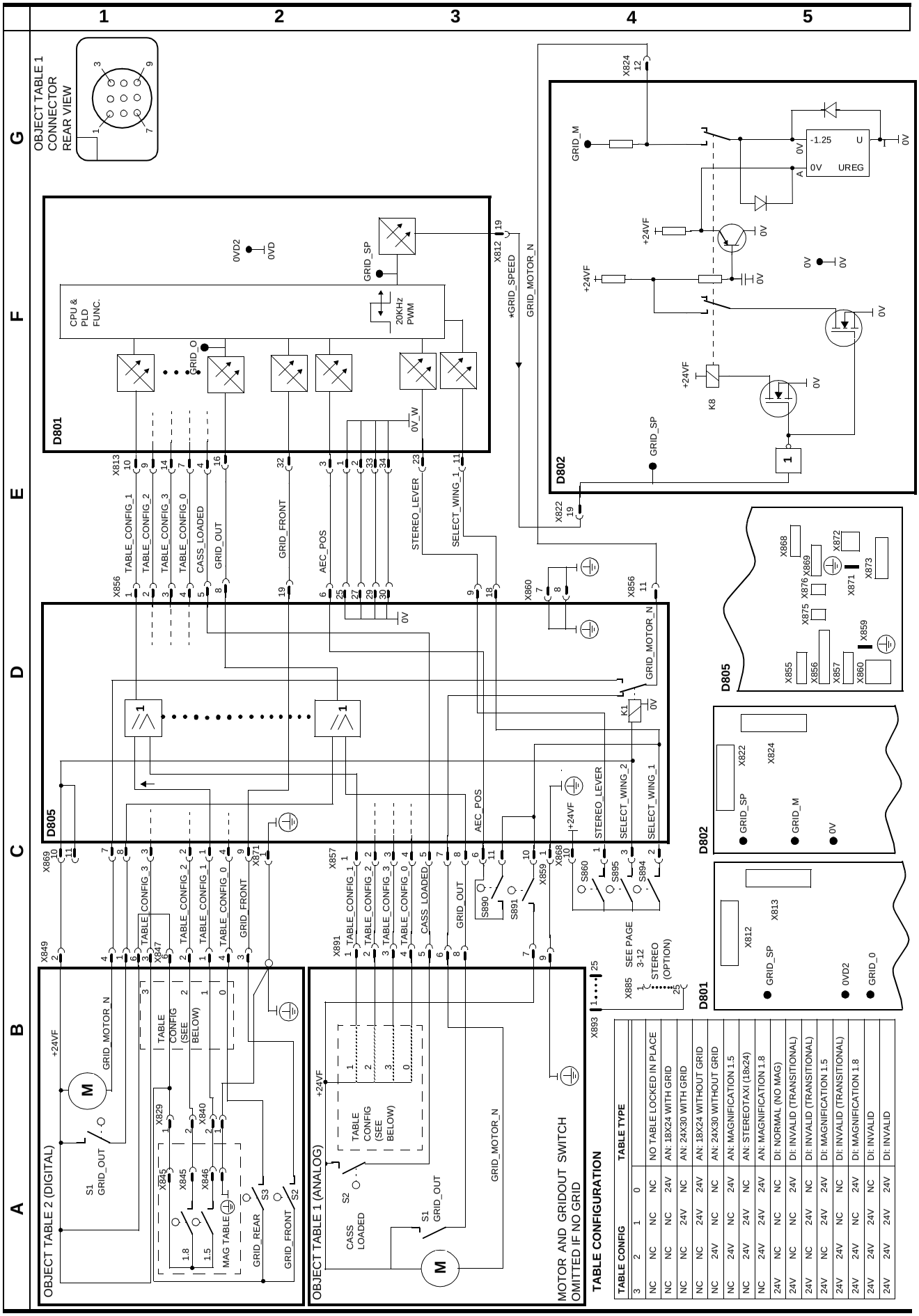

PXCM UNIT (BRICK UNIT)

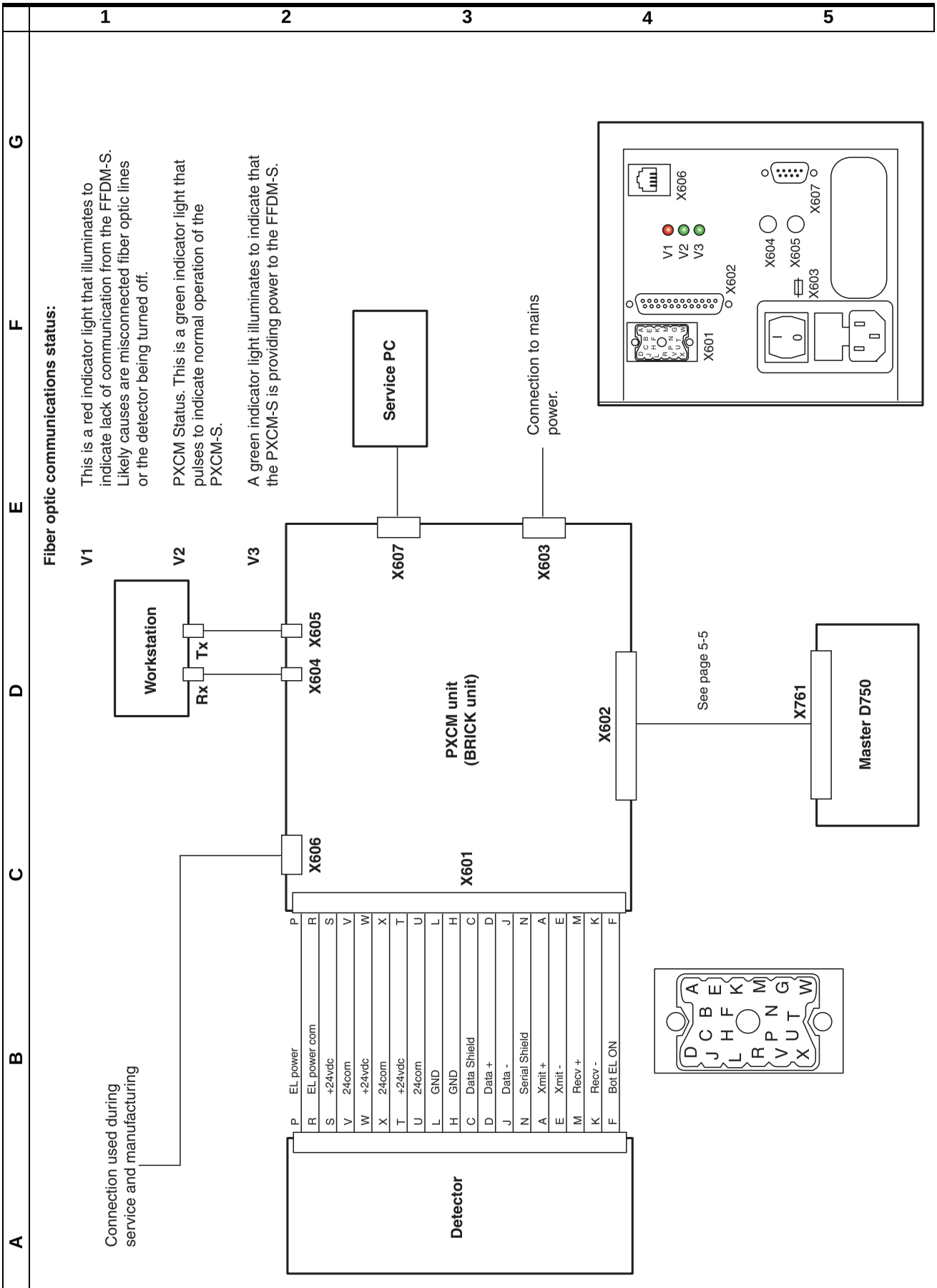

X041E

LEFT BLANK

	1	2	3	4	5
G					
F					
E					
D					
C					
B					
A					

This page is intentionally left blank.

MAINS VOLTAGE CONNECTION

The mains input can be either 1-phase or 2-phase, 50 or 60 Hz.

Electrical power to mains input:

Mains voltage	1-phase:	208, 230, 240 and 277 V ±10%
	or	
	2-phase:	208, 230, 240, 277 and 400 V ±10%
Mains Frequency:	50 or 60 Hz	
Maximum load:	10kVA (momentary) and 0.8 kVA (long time load).	
Fuse:	25 A (external) 208 -> 400 V.	

Power line impedance:

The generator section of the mammomat requires a line impedance not exceeding the maximum values according to the table below:

Nominal input voltage [VAC]	$Ri_{max}[\Omega]$
208	0.45
230	0.50
240	0.60
277	0.65
400	0.85

Connections:

Power system	Type of connection	Power voltage	Power connections
Singel phase	Phase to neutral	208 V-277 V	Connect to 3 and 4
Two phase	Phase to phase	208 V-400 V phase to phase. Note: Max 277 V phase to neutral/ ground allowed.	Connect to 3 and 4. Use two phases (of three) in a normal power distribution system.The left over wires, neutral and the third phase may be connected to terminal 1 and 2. See Fig. 1.

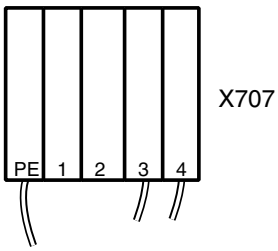

Note 1. PE = Protective Earth
Note 2. Terminals 1 and 2 are not connected internally. Can be used to secure wires when four or five wire power system is used.

Fig. 1

Modules:

PB0853	Mains input (Filter unit)
PB0850	Mains input converter
PB0855	AC inverter
PB0854	Tube power supply
PB0851	HV inverter
PB0852	HV Tank

Fuses:

- F2 8A/660VAC

  Placed inside PB0850 - Mains input converter
  Type: Ferraz Shawmut - 660GRB 10-08 / A070GRB08T13 or equivalent.

- F1 5A/660VAC

  Placed inside PB0850 - Mains input converter
  Type: Ferraz Shawmut - This fuse is used to protect the auxiliary board at unwanted failure, it does not protect internal components and is not intended to be a spare part.

PC-boards:

Master board D750

LEFT BLANK

This page is intentionally left blank.

Generator description of MAMMOMAT *Novation*DR

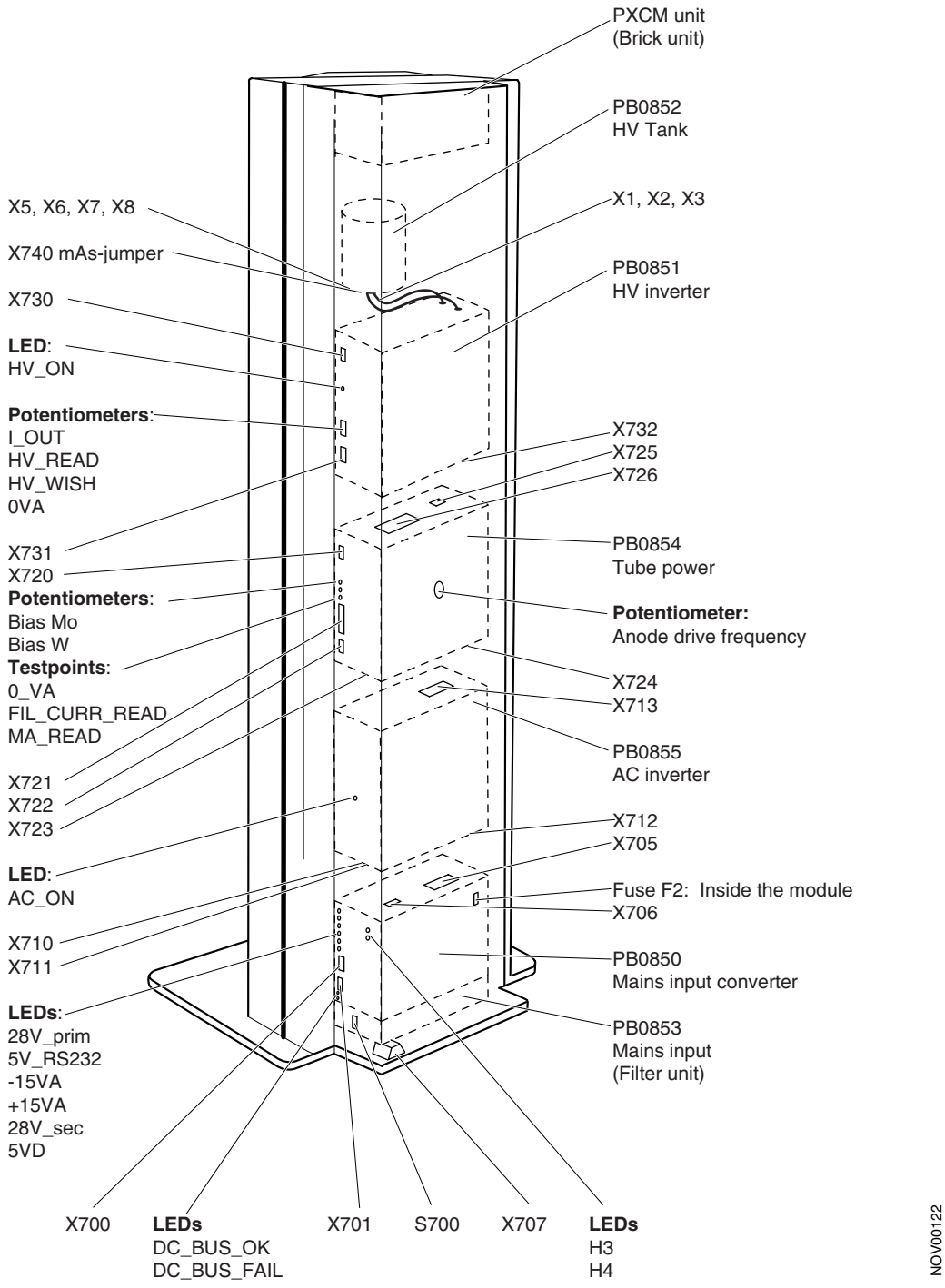

Fig. 2 Back of the stand (seen from the left)

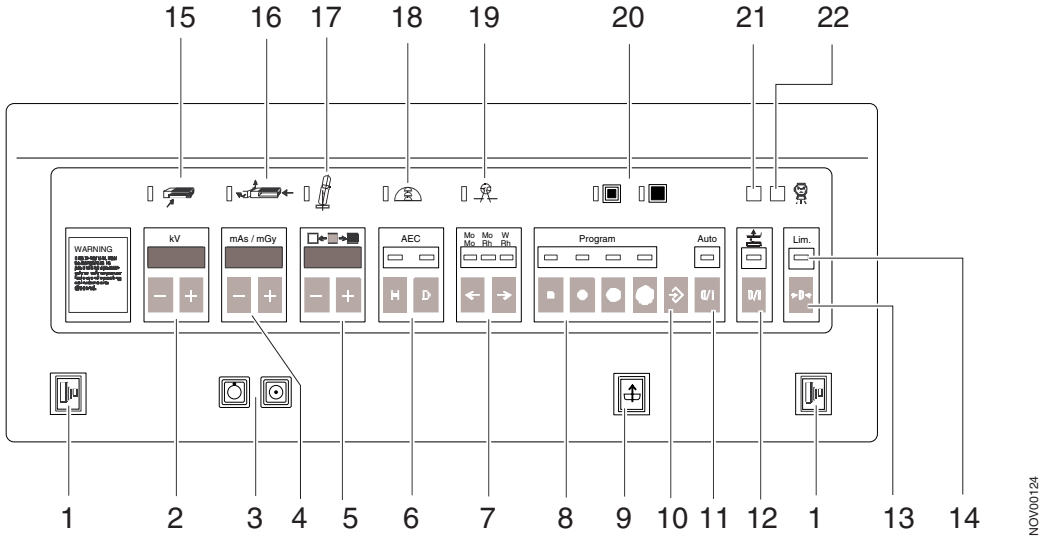

Fig. 3

1 Exposure release buttons with green lights. Both buttons must be pressed during the entire exposure. This is to ensure that the operator is standing behind the radiation shield during the exposure.

2 +/- kV selection and display

3 MAMMOMAT ***Novation***^{DR} ON/OFF

4 +/- mAs selection and display. In AEC mode (Automatic Exposure Control), the display remains dark before exposure. After the exposure, the mAs value reached during radiography is indicated.
If the dose calculation option is enabled, the dose value is shown on the same display as the mAs value.

5 ìdrî (digital radiography) is displayed on the film density display to indicate that the MAMMOMAT ***Novation***^{DR} is ready to be used. If the display is dark the communication with the DR-system is not working. The buttons are not used.

6 AEC. These buttons are used to activate AEC mode (Automatic Exposure Control). H stands for low dose exposure and D for high dose exposure.

7 Buttons for selection of anode/filter combination in manual mode.

8 Buttons for selection of one of four pre-programmed exposure parameter settings.

9 Decompression button.

10 Button for storing exposure parameter (see pos 8).

11 Button to select/deselect auto mode.

12 Button to select/deselect automatic decompression after exposure. When off, use foot switch or the knobs for manual decompression or use the decompression button (see pos 9).

13 Limit button (acknowledgement). Serves to reset the system after errors, indicated by an error code, or faulty exposures (limit errors), indicated also by the limit lamp and acoustic signal (e.g limit mAs, dose monitoring, interrupted exposure).

14 Limit lamp. Flashing: Tube temperature is above normal. Lit: Limit error (see pos 13).

15 Not used for digital mammography.

16 Indicates an unknown table configuration. e.g. magnification table not fully inserted.

17 Risk of collision between tube head and floor (limit switch is activated).

18 Not used for digital mammography.

19 Collimator not in correct position or wrong combination of object table and compression plate.

20 Focal spot indication. Indicates focus in operation. Small focus is automatically selected, when a magnification table is used.

21 Green light indicates that the unit is ready for exposure. This indicator has the same function as the green lights on the stand display and the exposure release buttons.

22 Yellow light and an acoustic signal indicate radiation ON.

Switches

Switch	Page	Description
S2	6-1	HV disable; HV = High Voltage Upper position = Normal mode Lower position = HV disable mode
S3	6-1	Manual activation of Power aid unit
S4	6-1	Manual reset of AEC processor

Test points

Test point	Page	Description
5VD_1	6-1	Logic supply voltage: 5 volt digital
0VD_1,2,3,4,5	6-1	Logic supply voltage: 0 volt digital
P15VA	6-1	Logic supply voltage: Positive 15 volt analog
0VA_1,2,3	6-1	Logic supply voltage: 0 volt analog
N15VA	6-1	Logic supply voltage: Negative 15 volt analog
5V_RS232	6-1	Logic supply voltage: 5 volt; for communication with PXCM unit (Brick unit)
0V_RS232	6-1	Logic supply voltage: 0 volt; for communication with PXCM unit (Brick unit)
5VI_RS232	6-1	Logic supply voltage: 5 volt; for communication with Service-PC, Opdima WS and Printer
0VI_RS232	6-1	Logic supply voltage: 0 volt; for communication with Service-PC, Opdima WS and Printer
M_WD_RESET_	6-1	Signal that resets the master CPU and thus causes the entire Mammomat system to restart.
GEN_POWER_ON	6-1	Signal to the generator that turns on the generator and thus the Mammomat system.
DC_BUS_OK	6-1	Signal from the generator, indicating the DC-bus voltage is within its allowed voltage window.
HV_OFF_INT_	6-1	Indicates that the signal M_PLD_HV_OFF_ from the PLD circuit has detected an event that shall terminate or prevent high voltage generation. It causes the signal HV_ON from the Master board to go inactive, which immediately prohibits high voltage generation.
REQ_HV_ON	6-1	Signal from PLD and CPU for generating high voltage and thus start the exposure. It will together with the signal GRID_O_HV_ON set the signal HV_ON.
HV_ON	6-1	Signal set by the signals REQ_HV_ON and GRID_O_HV_ON outputted to the generator. One of two necessary signals, together with the signal EN_HV_ON, to generate high voltage and thus start the exposure. This signal goes low at grid returns, due to GRID_O_HV_ON, thus causing the intermittent loading mode during exposure.
EN_HV_ON	6-1	Signal from the exposure release buttons at the Control panel to the generator. One of two necessary signals, together with the signal HV_ON, to generate high voltage and thus start the exposure.

Test point	Page	Description
GEN_POWERED_ON	6-1	Signal to the PXCM unit (Brick unit), that the power to the Mammomat system has been switched on by the operator.
PREP_DR_DET_	6-1	Signal to the PXCM unit (Brick unit). The positive edge indicates to the Brick that the generator preparation phase for making an exposure has started and requests that the DR detector shall prepare for image acquisition. The negative edge of the signal comes 5 ms after the negative edge of the signal GEN_RDY_FOR_DR_EXP at normal exposure termination, in case the hardware detects an error the negative edge of the signals will coincide. If a tube arc occur the signal will not go inactive.
GEN_RDY_FOR_DR_EXP	6-1	Signal to the PXCM unit (Brick unit). The generator preparation phase has finished and the generator is ready for generating high voltage to the tube (i.e. x-ray). The inactivation of the signal will coincide with negative edge of the signal X_RAY_ON at normal termination of the exposure. In case of an abnormal termination of the exposure, the inactivation of the signal coincides with the inactivation of the signal PREP_DR_DET. If a tube arc occur the signal will not go inactive.
X_RAY_ON	6-1	Signal to the PXCM unit (Brick unit). The exposure is in progress. Note: The signal stays active - at the grid turning points when x-ray actually is off. - at the first two tube arcs when x-ray actually is off.
DR_DET_RDY_FOR_EXP	6-1	The DR detector is making image data acquisition.
DR_SYST_RDY	6-1	The DROC of the DR system indicates that it is ready for an exposure.
DR_DET_ERR_	6-1	The DR system indicates to the generator that it has detected an error.
HV_SET	6-1	Analog output signal to the generator for setting the magnitude of the tube voltage (high voltage). The relation between the tube voltage and the analog control signal is 5kV/V.
HV_ACT	6-1	Analog input signal HV_ACT, from the generator, that is proportional to the true tube voltage. The relation between the tube voltage and the analog signal is 5kV/V.
MA_SET	6-1	Analog output signal to the generator for setting the magnitude of the tube current. The relation between the tube current and the analog control signal is 40mA/V.
MA_ACT	6-1	Analog input signal MA_ACT, from the generator, that is proportional to the true tube current. The relation between the tube current and the analog signal is 40mA/V.
FIL_CURR_SET	6-1	Analog output signal to the generator for setting the magnitude of the filament current. The relation between the filament current and the analog control signal is 1A/V.
FIL_CURR_ACT	6-1	Analog input signal FIL_CURR_ACT, from the generator, that is proportional to the true filament current. The relation between the filament current and the analog signal is 1A/V.

Test point	Page	Description
ACC_ANODE	6-1	Signal to the generator to start the anode rotation by accelerating the stator of the tube. The acceleration power (AC current) to the tube continues as long as the bit is set. Note, the generator stops the acceleration power to the tube if this signal is set longer than about 2.9 sec.
BRAKE_ANODE	6-1	Signal to the generator to stop the anode rotation by braking the stator of the tube. The braking power (DC current) to the tube continues as long as the bit is set. Note, the generator stops the braking power to the tube if this signal is set longer than about 7.4 sec.
ANODE_FREQ	6-1	Signal from the generator for measurement of the anode rotation speed. The frequency of the signal is equal to the anode rotation frequency. Note, PLD measurement of this signal starts 200 ms after the signal ACC_ANODE goes low, mean value of 10 pulses is calculated.

Switches:

Switch	Page	Module	Description
S700	4-5	Mains input (Filter unit)	On/Off circuit breaker for mains input, inside the covers. The breaker is intended for service/maintenance as an extra possibility to turn off the mains for safety at work with the unit. It shall be in On position when the covers are mounted. The breaker also protects the generator, it trips at overcurrent (30A) plus has a trip coil used for DC-bus overvoltage protection.

Potentiometers

Potentiometer	Page	Module	Description
Bias Mo	5-6	Tube power supply	Adjustment of bias voltage for Molybden (Mo).
Bias W	5-6	Tube power supply	Adjustment of bias voltage for Tungsten (W).
Anode drive freq.	5-7	Tube power supply	Adjustment of drive freq. 3 - 5 Hz from its nominal value, for decreasing noise that can occur due to mechanically vibrations from the tube assembly.

Test points

Test point	Page	Module	Description
0VA	5-6	Tube power supply	Logic supply voltage: 0 volt analog Note: 0VA = 0V_sec
FIL_CURR_READ	5-6	Tube power supply	Analog signal proportional to the true filament current. The relation between the filament current and the analog signal is 1A/V.
MA_READ	5-6	Tube power supply	Analog signal proportional to the true tube current. The relation between the tube current and the analog signal is 40mA/V.
I_OUT	5-8	HV inverter	Analog signal proportional to the output inverter current fed to the HV tank.
HV_READ	5-8	HV inverter	Analog signal proportional to the true tube voltage. The relation between the tube voltage and the analog signal is 5kV/V.
HV_WISH	5-8	HV inverter	Analog control signal for setting the magnitude of the tube voltage (high voltage). The relation between the tube voltage and the analog control signal is 5kV/V.
0VA	5-6	HV inverter	Logic supply voltage: 0 volt analog Note: 0VA = 0V_sec

LEDs:

LED	Page	Module	Description
28V_prim	4-5	Mains input converter	Logic supply voltage: 28-30 volt, only to the generator modules. Note: The voltage is hazardous.
5V_RS232	4-5	Mains input converter	Logic supply voltage: 5 volt; for communication with PXCM unit (Brick unit)
-15VA	4-5	Mains input converter	Logic supply voltage: Negative 15 volt analog
+15VA	4-5	Mains input converter	Logic supply voltage: Positive 15 volt analog
28V_sec	4-5	Mains input converter	Logic supply voltage: 28-30 volt, only to the generator modules.
+5VD	4-5	Mains input converter	Logic supply voltage: 5 volt digital
DC_BUS_OK	4-5	Mains input converter	The DC-bus voltage is OK, that is, inside its upper and lower limits. Note: The LED can only be lit when the D750 Master board gives a GEN_POWER_ON signal.
DC_BUS_FAIL	4-5	Mains input converter	The DC-bus voltage is outside its upper or lower limits. Note: The LED can only be lit when the D750 Master board gives a GEN_POWER_ON signal.
H3	4-5	Mains input converter	The DC-bus voltage is present (>15 volt) to the AC inverter and to the Tube power supply. Note: If LED H3 not is lit but H4 is lit, indicates the fuse F2 inside the Mains input converter has blown and need to be replaced.
H4	4-5	Mains input converter	The DC-bus voltage is present (>15 volt) to the HV inverter.
AC_ON	4-5	AC inverter	The AC output voltage is present.
HV_ON	4-5	HV inverter	The EN_HV_ON signal is set and thus x-ray exposure is on.

Comment: Before making any service/maintenance on the generator modules both LEDs H3 and H4 shall be off, thus making sure the DC-bus voltage not is present.
The DC-bus voltage discharges below 60 volt within 3 minutes.

GENERATOR: BLOCK DIAGRAM

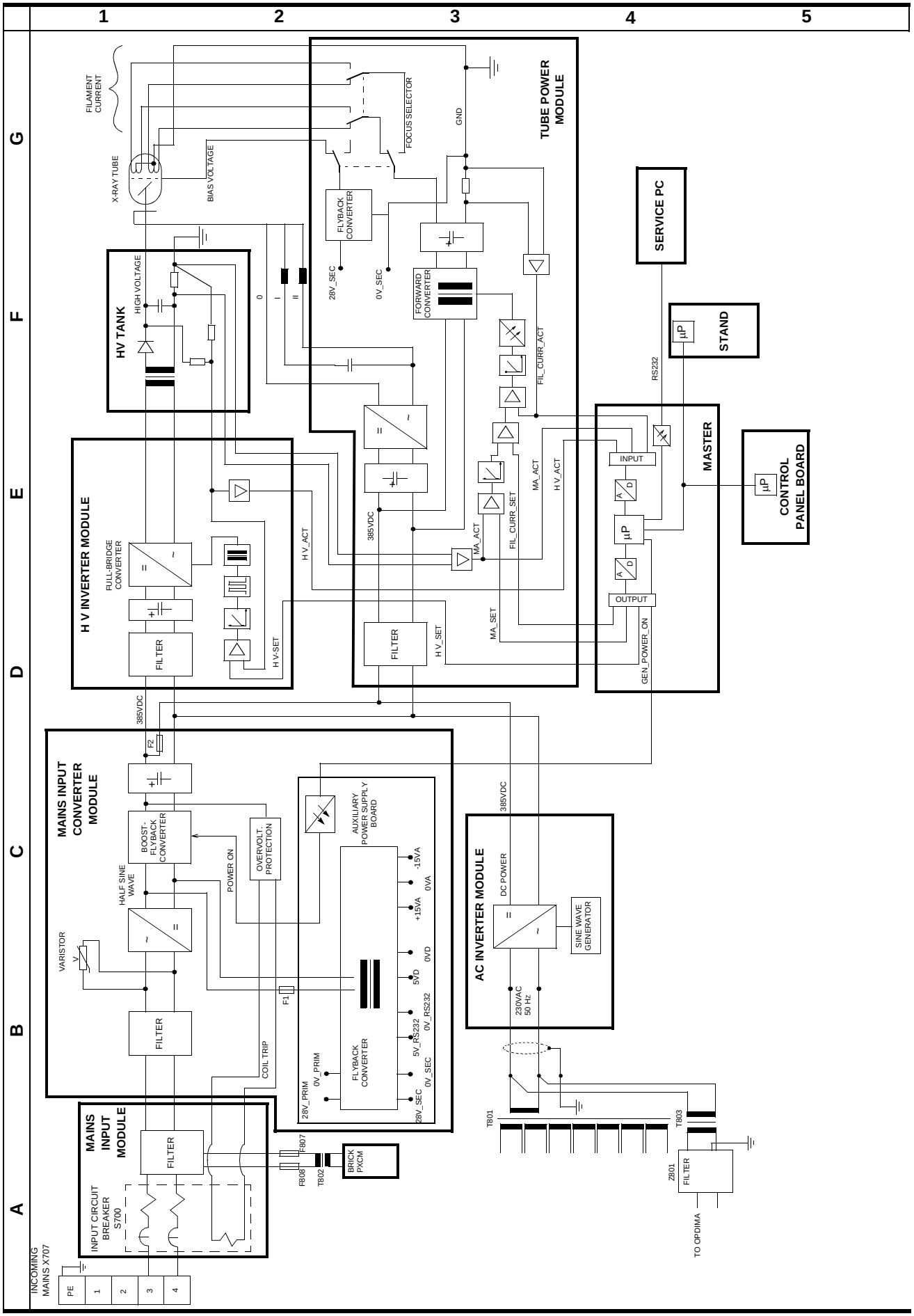

LEFT BLANK

	1	2	3	4	5
G					
F					
E					
D					
C					
B					
A					

This page is intentionally left blank

GENERATOR:
MAINS INPUT & MAINS INPUT CONVERTER
PRINCIPLE DIAGRAM

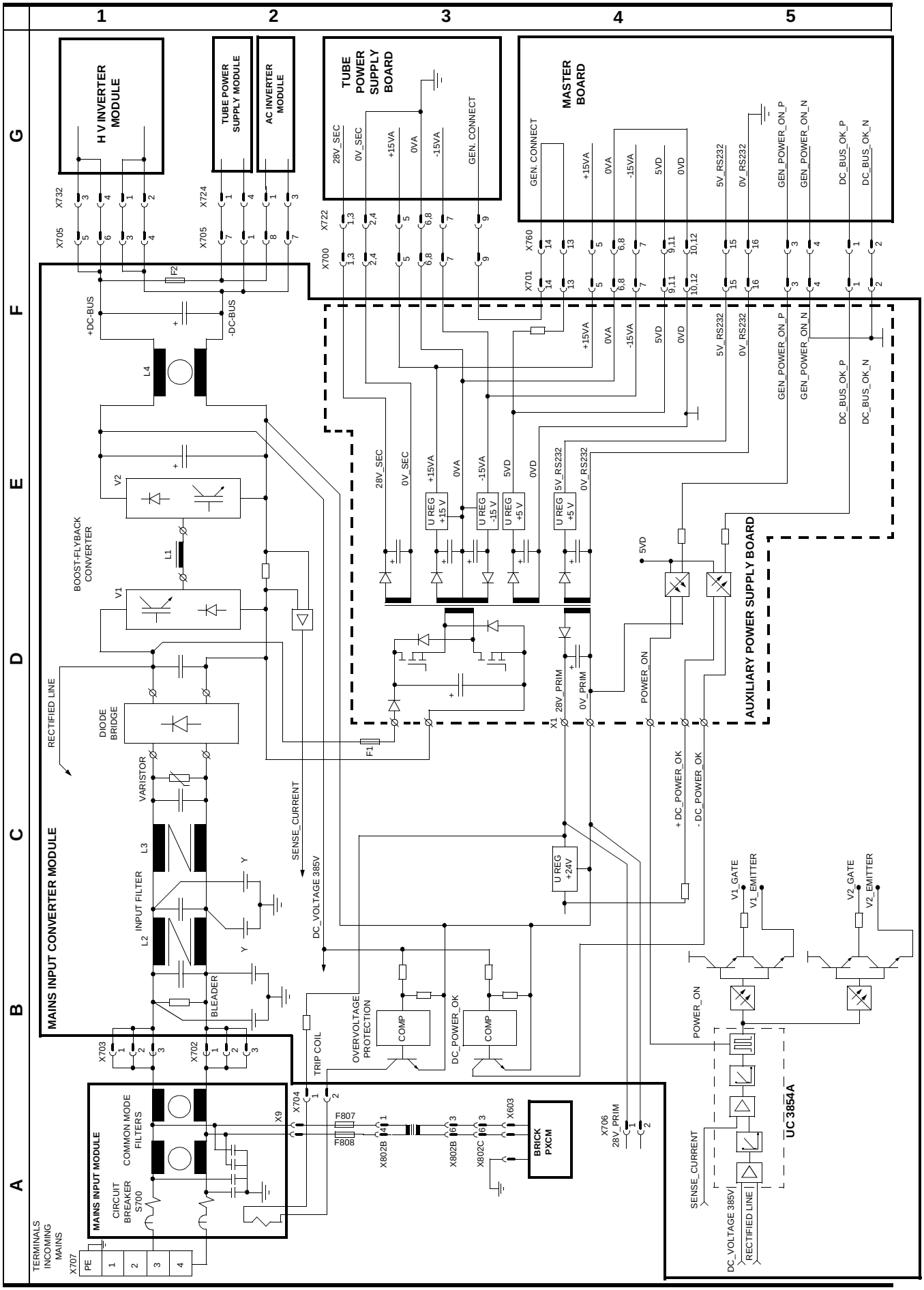

LEFT BLANK

	1	2	3	4	5
G					
F					
E					
D					
C					
B					
A					

This page is intentionally left blank.

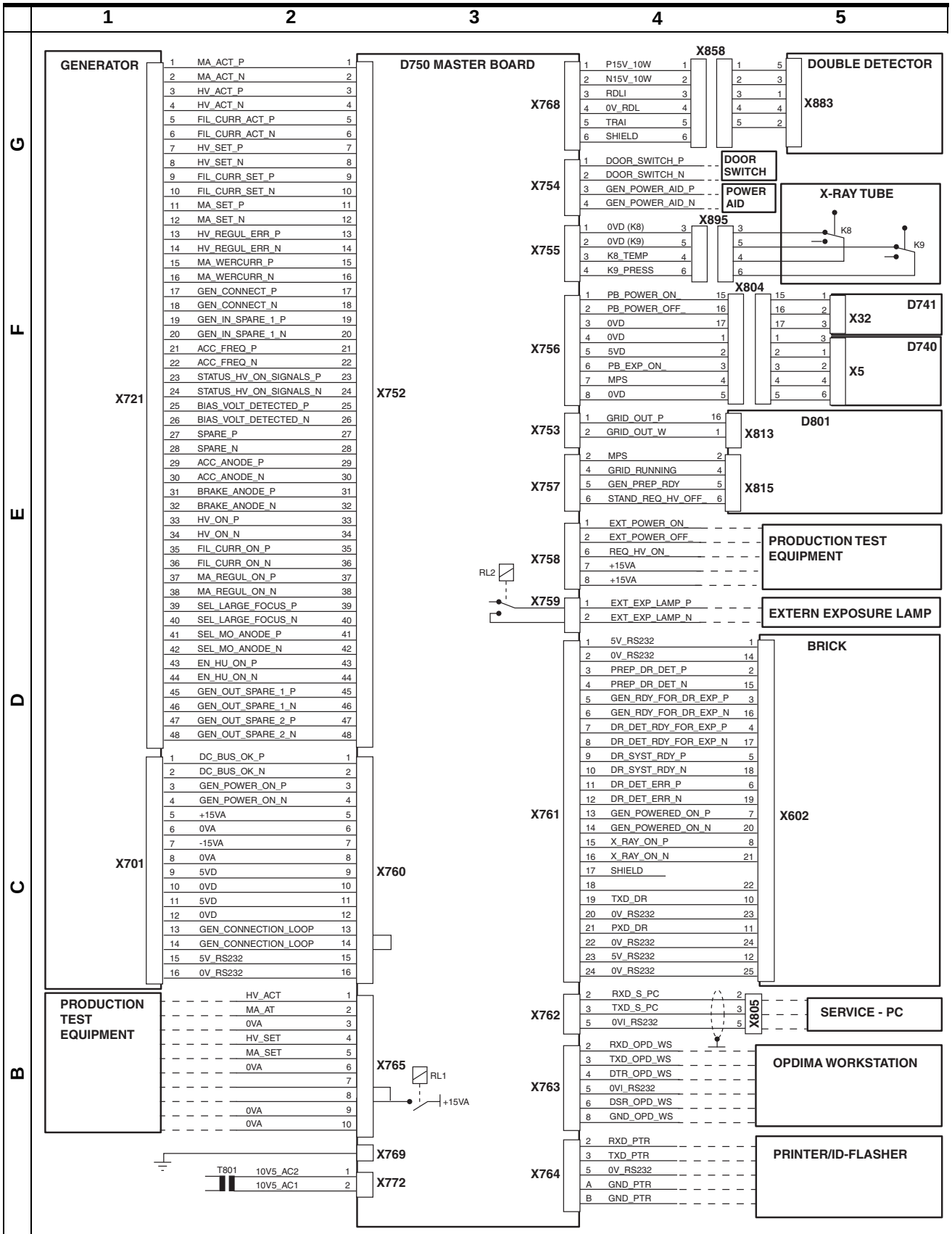
1
2
3
4
5
G
F
E
D
C
B
A
GENERATOR
X721
1 MA_ACT_P 1
2 MA_ACT_N 2
3 HV_ACT_P 3
4 HV_ACT_N 4
5 FIL_CURR_ACT_P 5
6 FIL_CURR_ACT_N 6
7 HV_SET_P 7
8 HV_SET_N 8
9 FIL_CURR_SET_P 9
10 FIL_CURR_SET_N 10
11 MA_SET_P 11
12 MA_SET_N 12
13 HV_REGUL_ERR_P 13
14 HV_REGUL_ERR_N 14
15 MA_WERCURR_P 15
16 MA_WERCURR_N 16
17 GEN_CONNECT_P 17
18 GEN_CONNECT_N 18
19 GEN_IN_SPARE_1_P 19
20 GEN_IN_SPARE_1_N 20
21 ACC_FREQ_P 21
22 ACC_FREQ_N 22
23 STATUS_HV_ON_SIGNALS_P 23
24 STATUS_HV_ON_SIGNALS_N 24
25 BIAS_VOLT_DETECTED_P 25
26 BIAS_VOLT_DETECTED_N 26
27 SPARE_P 27
28 SPARE_N 28
29 ACC_ANODE_P 29
30 ACC_ANODE_N 30
31 BRAKE_ANODE_P 31
32 BRAKE_ANODE_N 32
33 HV_ON_P 33
34 HV_ON_N 34
35 FIL_CURR_ON_P 35
36 FIL_CURR_ON_N 36
37 MA_REGUL_ON_P 37
38 MA_REGUL_ON_N 38
39 SEL_LARGE_FOCUS_P 39
40 SEL_LARGE_FOCUS_N 40
41 SEL_MO_ANODE_P 41
42 SEL_MO_ANODE_N 42
43 EN_HU_ON_P 43
44 EN_HU_ON_N 44
45 GEN_OUT_SPARE_1_P 45
46 GEN_OUT_SPARE_1_N 46
47 GEN_OUT_SPARE_2_P 47
48 GEN_OUT_SPARE_2_N 48
X752
X701
1 DC_BUS_OK_P 1
2 DC_BUS_OK_N 2
3 GEN_POWER_ON_P 3
4 GEN_POWER_ON_N 4
5 +15VA 5
6 0VA 6
7 -15VA 7
8 0VA 8
9 5VD 9
10 0VD 10
11 5VD 11
12 0VD 12
13 GEN_CONNECTION_LOOP 13
14 GEN_CONNECTION_LOOP 14
15 5V_RS232 15
16 0V_RS232 16
X760
PRODUCTION TEST EQUIPMENT
HV_ACT 1
MA_AT 2
0VA 3
HV_SET 4
MA_SET 5
0VA 6
7
8
0VA 9
0VA 10
X765
RL1
+15VA
X769
T801
10V5_AC2 1
10V5_AC1 2
X772
D750 MASTER BOARD
X858
X768
1 P15V_10W 1
2 N15V_10W 2
3 RDLI 3
4 0V_RDL 4
5 TRAI 5
6 SHIELD 6
1 5
2 3
3 1
4 4
5 2
DOUBLE DETECTOR
X883
X754
1 DOOR_SWITCH_P
2 DOOR_SWITCH_N
3 GEN_POWER_AID_P
4 GEN_POWER_AID_N
DOOR SWITCH
POWER AID
X755
X895
1 0VD (K8) 3
2 0VD (K9) 5
3 K8_TEMP 4
4 K9_PRESS 6
3
5
4
6
X-RAY TUBE
K8
K9
X756
X804
1 PB_POWER_ON_ 15
2 PB_POWER_OFF_ 16
3 0VD 17
4 0VD 1
5 5VD 2
6 PB_EXP_ON_ 3
7 MPS 4
8 0VD 5
15 1
16 2
17 3
1 3
2 1
3 2
4 4
5 6
D741
X32
D740
X5
X753
1 GRID_OUT_P 16
2 GRID_OUT_W 1
X813
D801
X757
2 MPS 2
4 GRID_RUNNING 4
5 GEN_PREP_RDY 5
6 STAND_REQ_HV_OFF_ 6
X815
X758
1 EXT_POWER_ON_
2 EXT_POWER_OFF_
6 REQ_HV_ON_
7 +15VA
8 +15VA
PRODUCTION TEST EQUIPMENT
RL2
X759
1 EXT_EXP_LAMP_P
2 EXT_EXP_LAMP_N
EXTERN EXPOSURE LAMP
BRICK
X761
1 5V_RS232 1
2 0V_RS232 14
3 PREP_DR_DET_P 2
4 PREP_DR_DET_N 15
5 GEN_RDY_FOR_DR_EXP_P 3
6 GEN_RDY_FOR_DR_EXP_N 16
7 DR_DET_RDY_FOR_EXP_P 4
8 DR_DET_RDY_FOR_EXP_N 17
9 DR_SYST_RDY_P 5
10 DR_SYST_RDY_N 18
11 DR_DET_ERR_P 6
12 DR_DET_ERR_N 19
13 GEN_POWERED_ON_P 7
14 GEN_POWERED_ON_N 20
15 X_RAY_ON_P 8
16 X_RAY_ON_N 21
17 SHIELD
18 22
19 TXD_DR 10
20 0V_RS232 23
21 PXD_DR 11
22 0V_RS232 24
23 5V_RS232 12
24 0V_RS232 25
X602
X762
2 RXD_S_PC 2
3 TXD_S_PC 3
5 0VI_RS232 5
X805
SERVICE - PC
X763
2 RXD_OPD_WS
3 TXD_OPD_WS
4 DTR_OPD_WS
5 0VI_RS232
6 DSR_OPD_WS
8 GND_OPD_WS
OPDIMA WORKSTATION
X764
2 RXD_PTR
3 TXD_PTR
5 0V_RS232
A GND_PTR
B GND_PTR
PRINTER/ID-FLASHER

GENERATOR - TUBE POWER SUPPLY: PRINCIPLE DIAGRAM TUBE FILAMENT AND FOCUS SELECTION

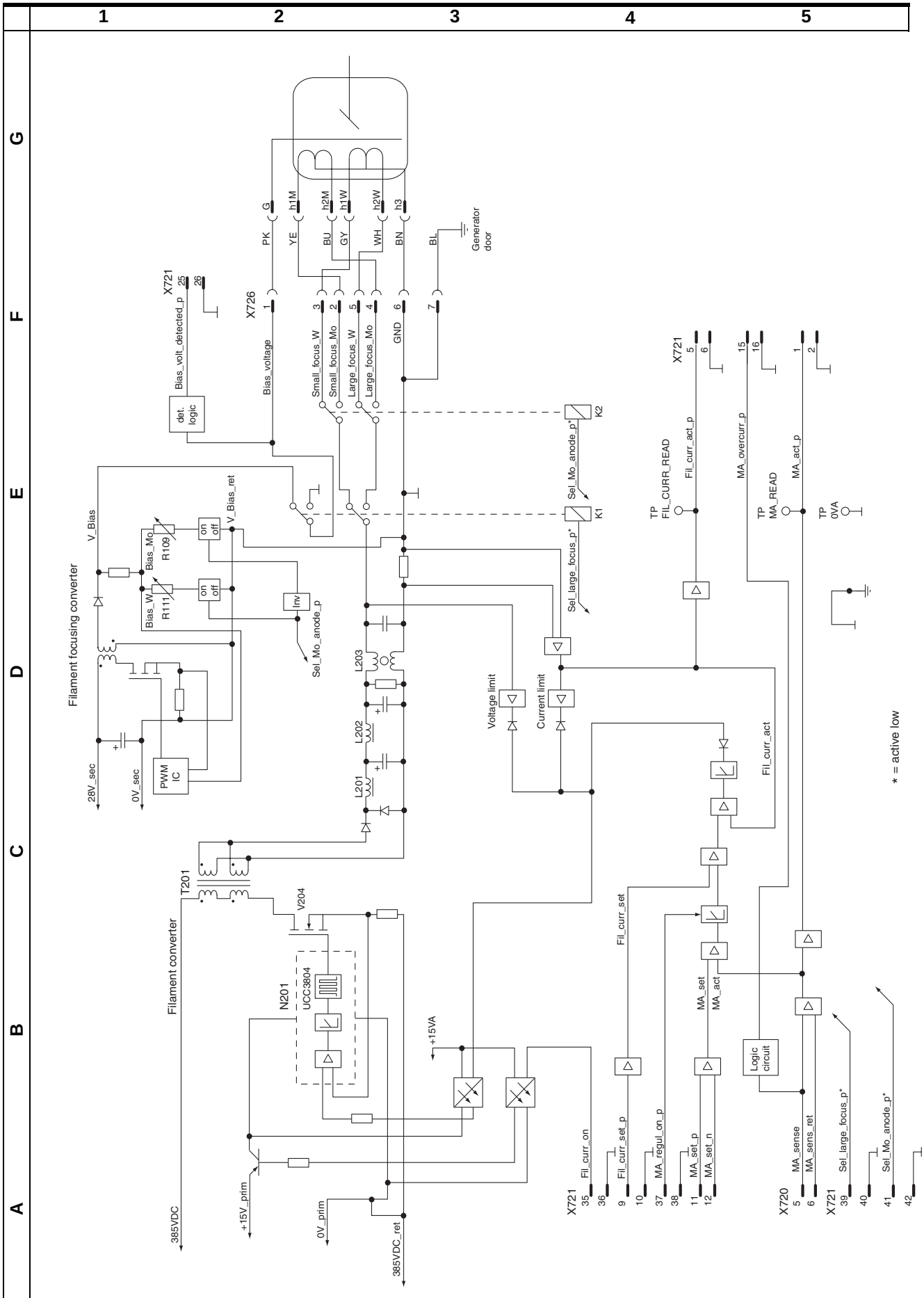

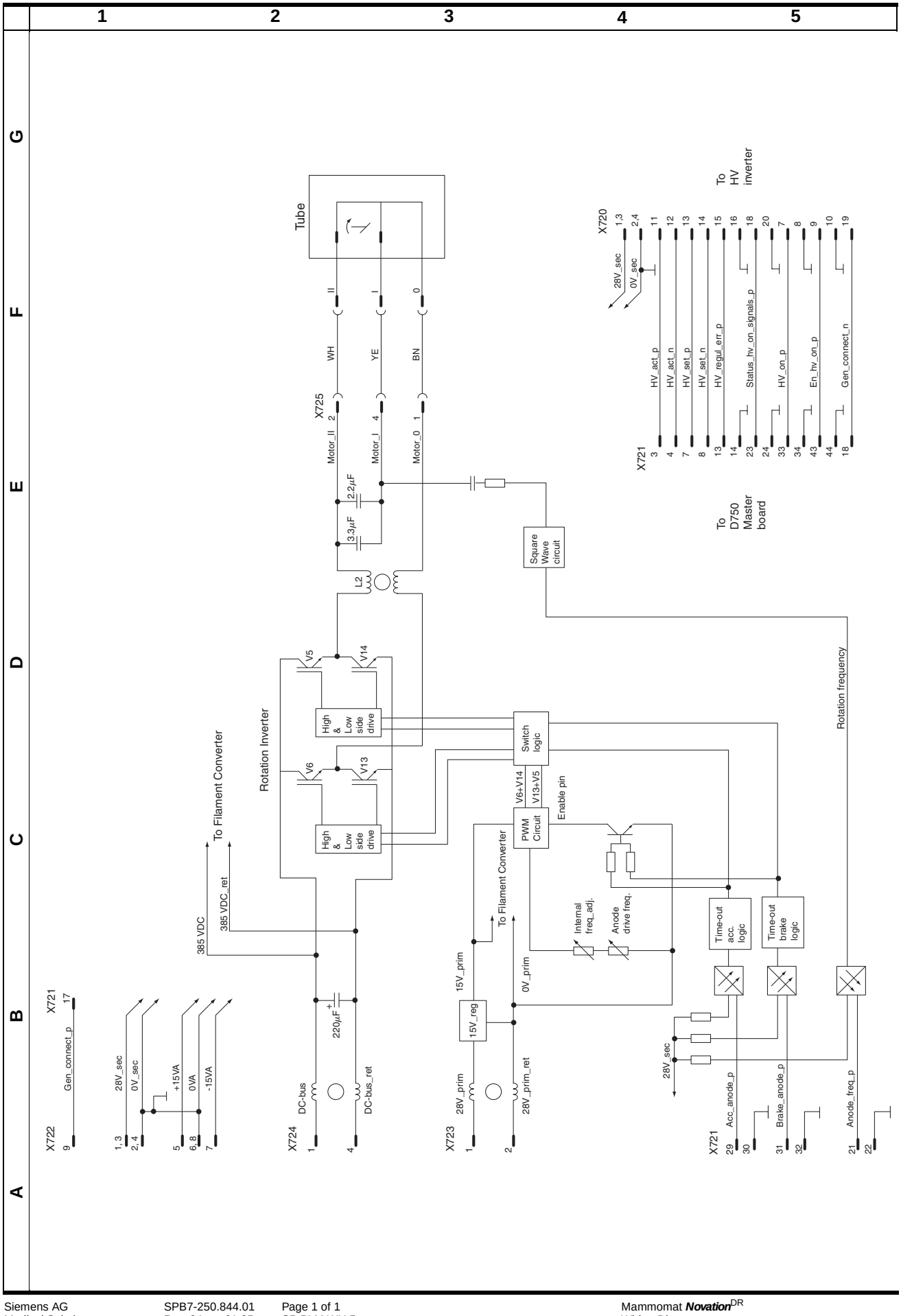
1
2
3
4
5
A
B
C
D
E
F
G
Tube
X725
Motor_II 2
Motor_I 4
Motor_0 1
WH
YE
BN
II
I
0
2.2µF
3.3µF
L2
Square Wave circuit
X720
1,3
2,4
28V_sec
0V_sec
X721
HV_act_p
HV_act_n
HV_set_p
HV_set_n
HV_regul_err_p
Status_hv_on_signals_p
HV_on_p
En_hv_on_p
Gen_connect_n
To HV inverter
To D750 Master board
Rotation Inverter
V5
V14
V6
V13
High & Low side drive
Switch logic
V6+V14
V13+V5
PWM Circuit
Enable pin
To Filament Converter
385 VDC
385 VDC_ret
Internal freq_adj.
Anode drive freq.
Time-out acc. logic
Time-out brake logic
Rotation frequency
15V_prim
15V_reg
0V_prim
28V_prim
28V_prim_ret
28V_sec
DC-bus
DC-bus_ret
220µF
X722
Gen_connect_p
+15VA
0VA
-15VA
X723
X724
Acc_anode_p
Brake_anode_p
Anode_freq_p

GENERATOR - HV INVERTER: PRINCIPLE DIAGRAM, CONTROL LOGIC

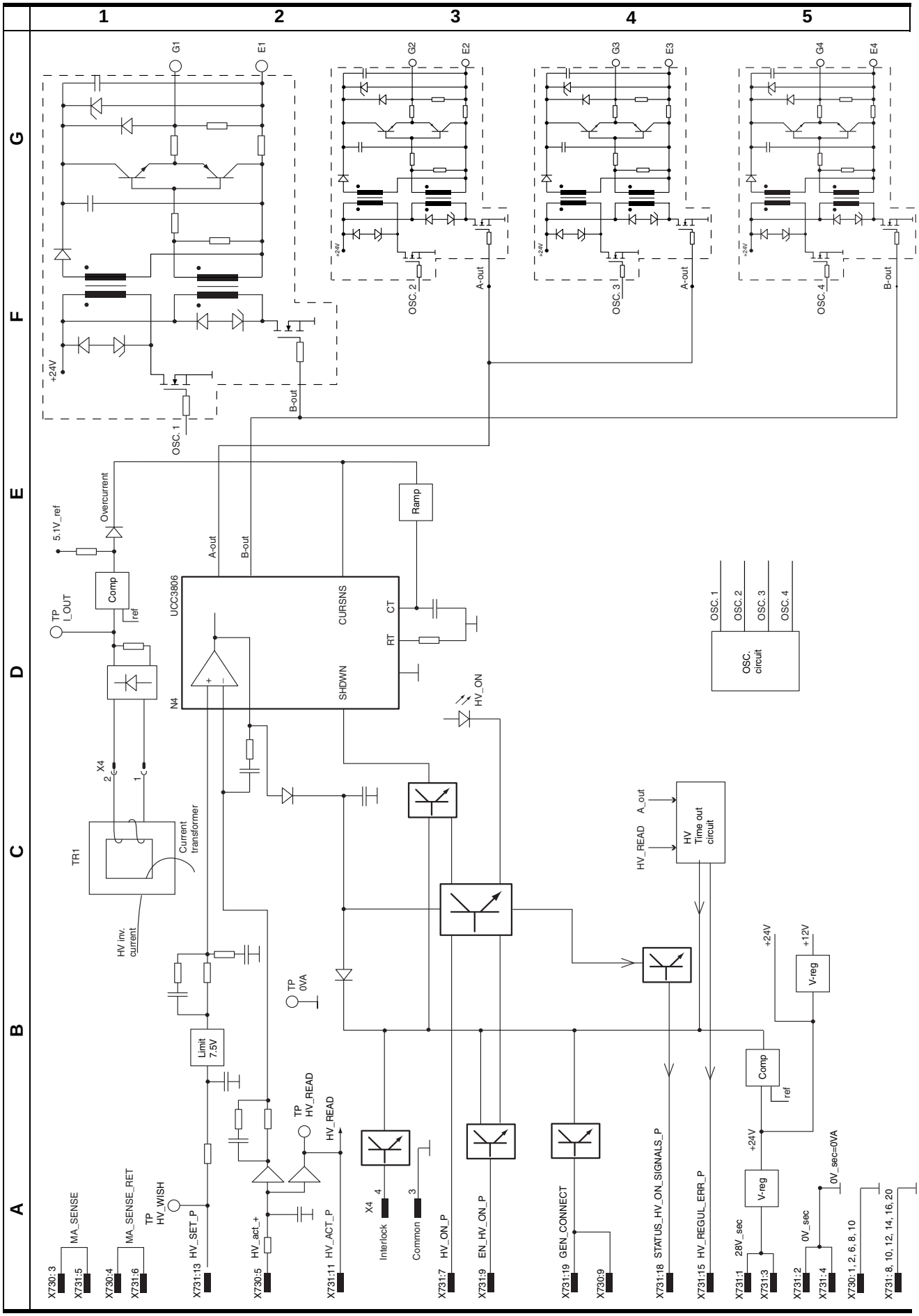

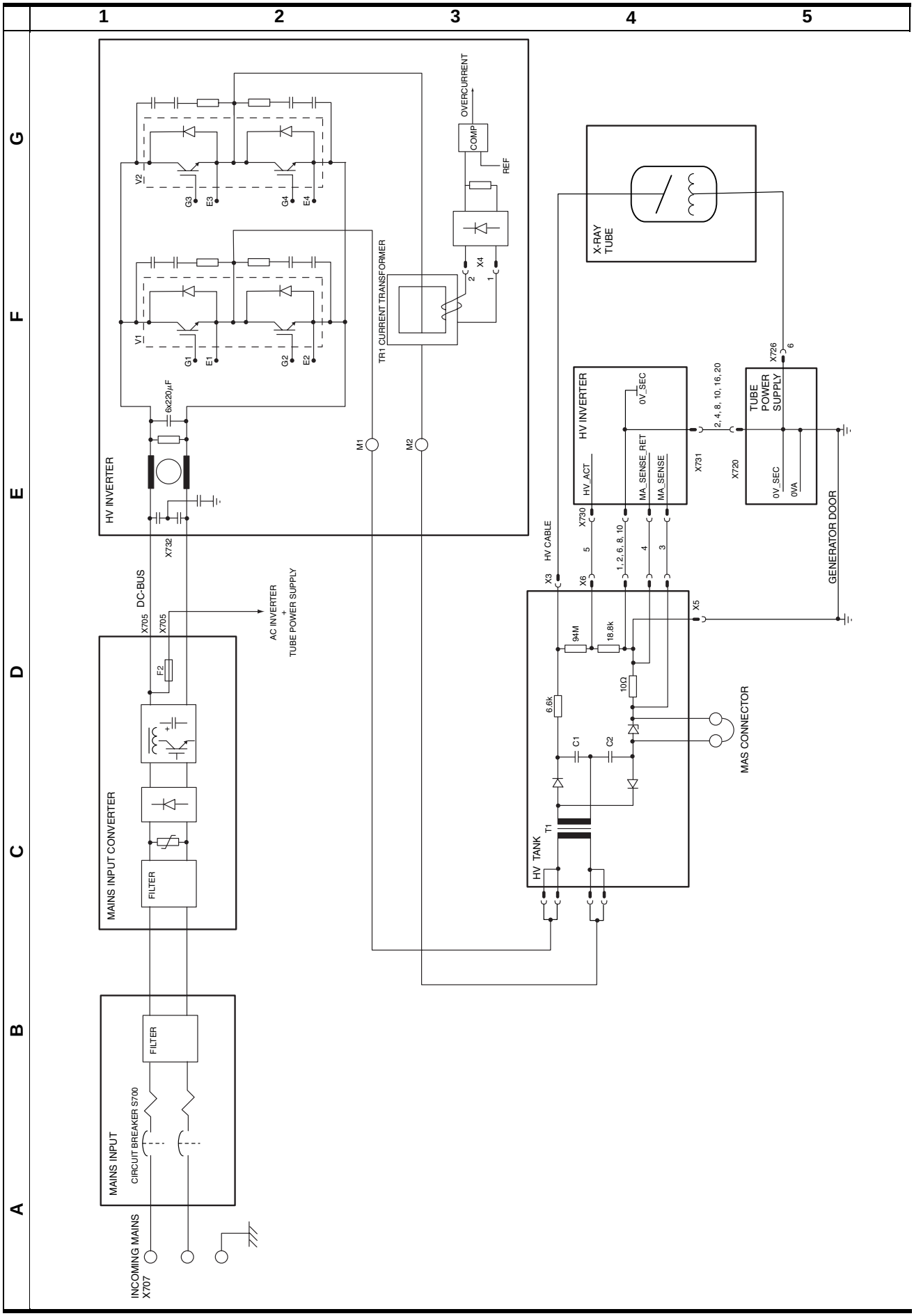
1
2
3
4
5
A
B
C
D
E
F
G
HV INVERTER
V2
G3
E3
G4
E4
V1
G1
E1
G2
E2
6x220µF
OVERCURRENT
COMP
REF
TR1 CURRENT TRANSFORMER
X4
2
1
M1
M2
X732
DC-BUS
X705
X705
F2
AC INVERTER
+
TUBE POWER SUPPLY
MAINS INPUT CONVERTER
FILTER
MAINS INPUT
CIRCUIT BREAKER S700
FILTER
INCOMING MAINS
X707
X-RAY
TUBE
HV INVERTER
HV_ACT
0V_SEC
MA_SENSE_RET
MA_SENSE
X730
X731
2, 4, 8, 10, 16, 20
TUBE
POWER
SUPPLY
X726
6
X720
0V_SEC
0VA
HV CABLE
X3
X6
5
1, 2, 6, 8, 10
4
3
X5
GENERATOR DOOR
94M
18.8k
10Ω
6.6k
C1
C2
MAS CONNECTOR
HV TANK
T1

PRINCIPLE DIAGRAM, CONTROL PANEL

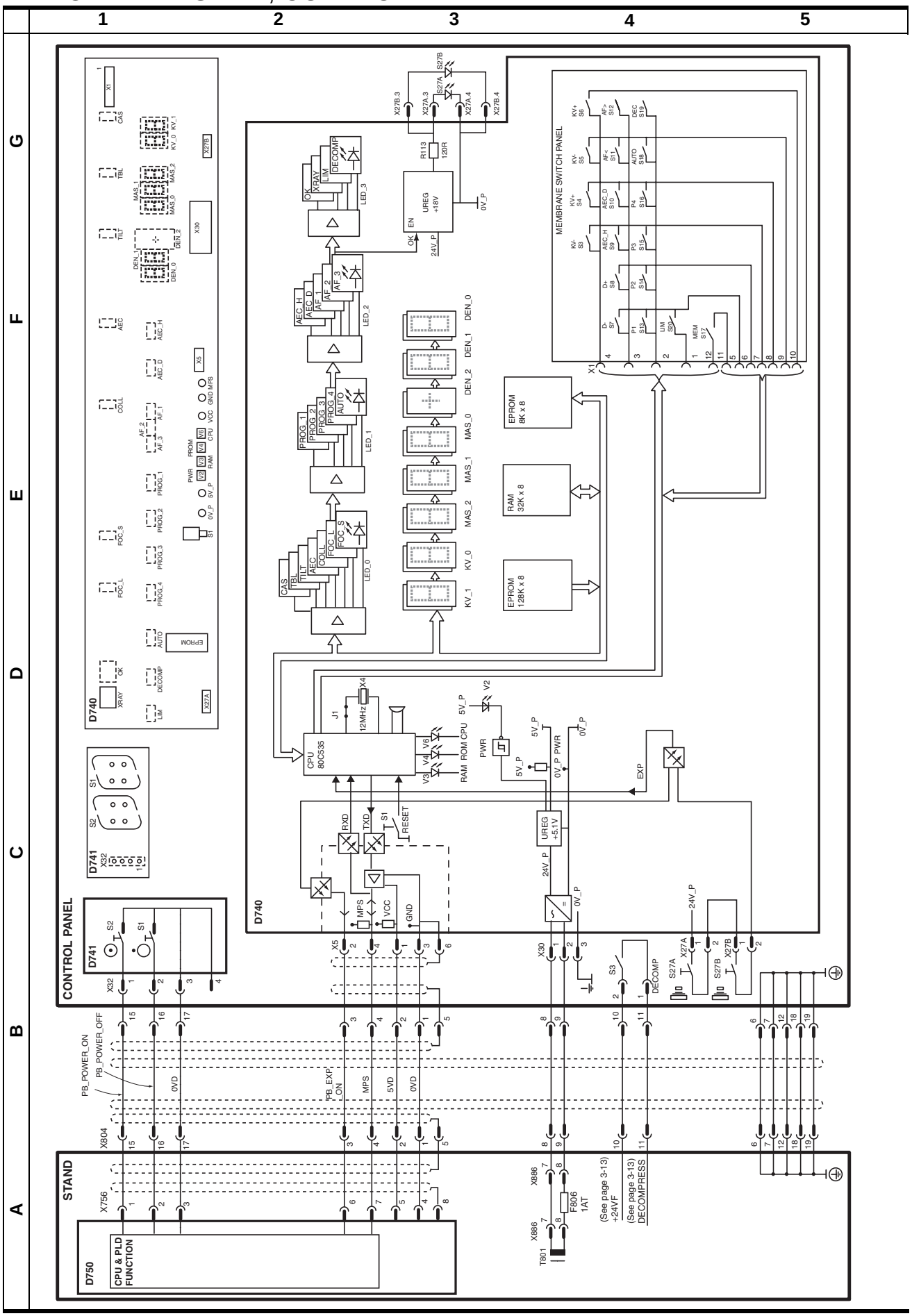

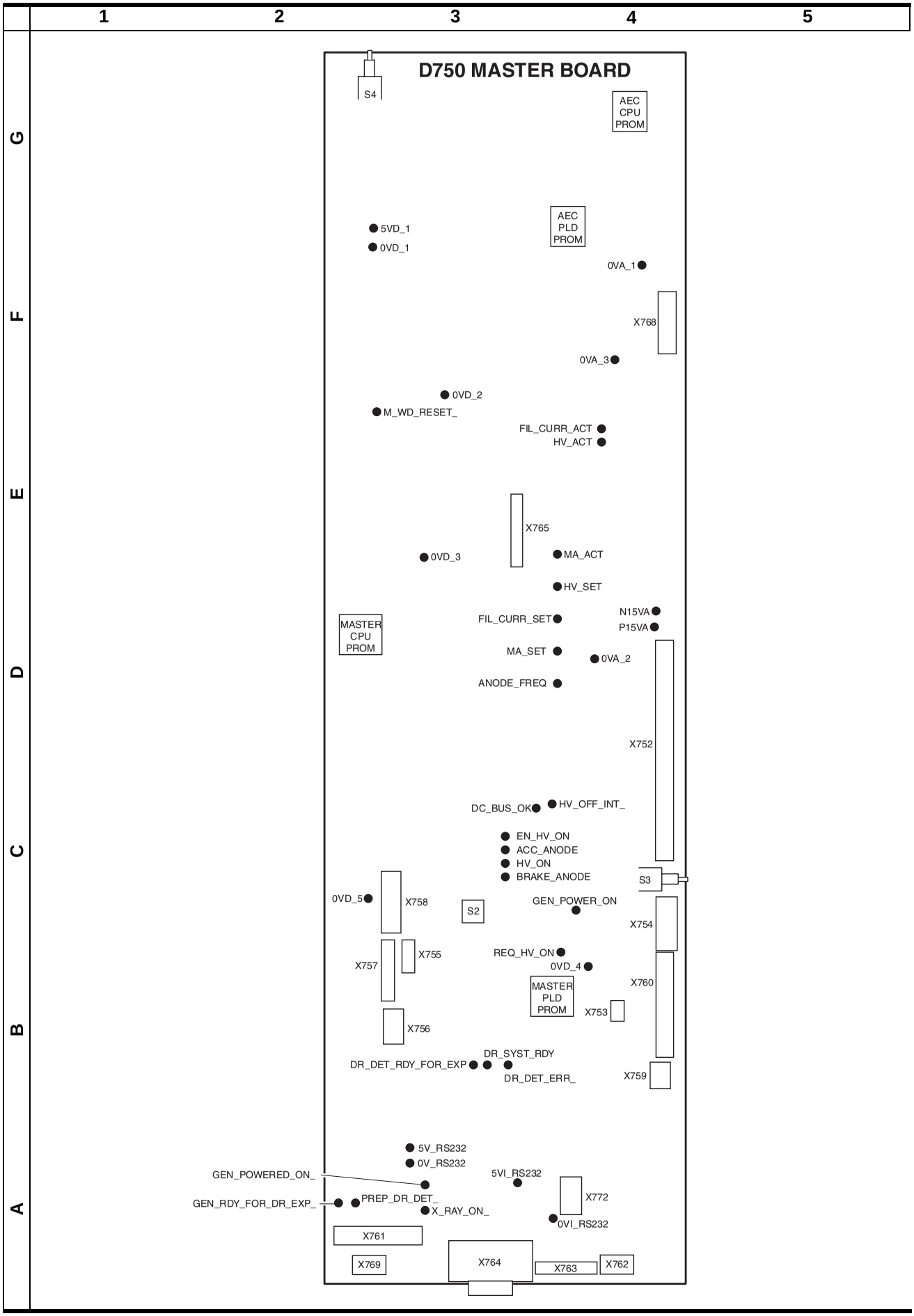
1
2
3
4
5
G
F
E
D
C
B
A
D750 MASTER BOARD
S4
AEC CPU PROM
AEC PLD PROM
5VD_1
0VD_1
0VA_1
X768
0VA_3
0VD_2
M_WD_RESET_
FIL_CURR_ACT
HV_ACT
X765
0VD_3
MA_ACT
HV_SET
MASTER CPU PROM
FIL_CURR_SET
N15VA
P15VA
MA_SET
0VA_2
ANODE_FREQ
X752
DC_BUS_OK
HV_OFF_INT_
EN_HV_ON
ACC_ANODE
HV_ON
BRAKE_ANODE
S3
0VD_5
X758
S2
GEN_POWER_ON
X754
X757
X755
REQ_HV_ON
0VD_4
X760
MASTER PLD PROM
X753
X756
DR_SYST_RDY
DR_DET_RDY_FOR_EXP
DR_DET_ERR_
X759
5V_RS232
0V_RS232
GEN_POWERED_ON_
5VI_RS232
X772
GEN_RDY_FOR_DR_EXP_
PREP_DR_DET_
X_RAY_ON_
0VI_RS232
X761
X769
X764
X763
X762

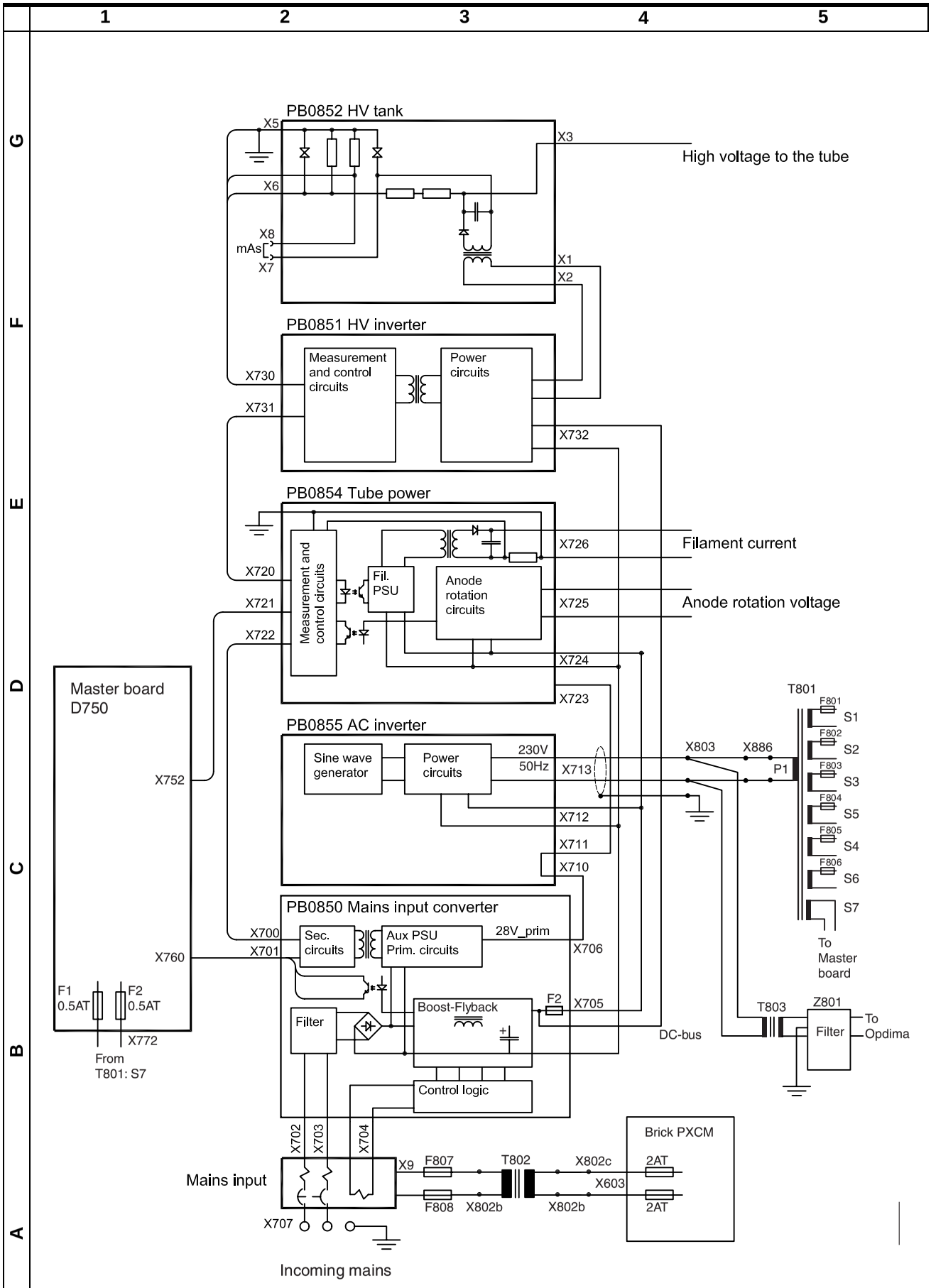
1
2
3
4
5
G
F
E
D
C
B
A
PB0852 HV tank
X5
X6
X8
mAs
X7
X3
X1
X2
High voltage to the tube
PB0851 HV inverter
X730
X731
Measurement and control circuits
Power circuits
X732
PB0854 Tube power
X720
X721
X722
Measurement and control circuits
Fil. PSU
Anode rotation circuits
X726
X725
X724
X723
Filament current
Anode rotation voltage
PB0855 AC inverter
Sine wave generator
Power circuits
230V 50Hz
X713
X712
X711
X710
Master board D750
X752
X760
F1 0.5AT
F2 0.5AT
X772
From T801: S7
PB0850 Mains input converter
X700
X701
Sec. circuits
Aux PSU Prim. circuits
28V_prim
X706
Filter
Boost-Flyback
F2
X705
Control logic
X702
X703
X704
Mains input
X707
Incoming mains
X9
F807
F808
T802
X802b
X802c
X603
2AT
2AT
Brick PXCM
X803
X886
P1
T801
F801
S1
F802
S2
F803
S3
F804
S5
F805
S4
F806
S6
S7
To Master board
DC-bus
T803
Z801
Filter
To Opdima

Changes to previous version

Chapter	Page	Change
1	1	New chapter, system overview.
1	2	New chapter, system overview - stand
2	5	Updated with page references.
2	6	Updated with page references.
2	8	Updated with page references.
2	9	Updated.
2	10	Updated with page references.
2	12	Updated with page references.
2	13	Updated with signal name, Thickness_B.
2	14	Updated with page references.
3	2	Updated.
3	3	New chapter, mains connection, power supply CPU.
3	4	New chapter, power supply motor control.
3	5	New chapter, display.
3	6	Updated.
3	7	New chapter, tube, temperature monitoring.
3	8	New chapter, lift and rotation.
3	9	New chapter, lift and rotation motor drive.
3	10	New chapter, lift and rotation switches.
3	11	This page is intentionally left blank.
3	12	New chapter, compression measurement signals.
3	13	New chapter, compression motor drive.
3	14	New chapter, tube angle measurement, pot. return, tilt signals.
3	15	Updated.
3	16	Updated.
3	17	Updated.
3	18	New chapter, PXCM unit (Brick unit)

Changes to previous version

Chapter	Page	Change
5	2	This page is intentionally left blank.
5	10	New chapter, principle diagram, control panel.
6	1	Updated.
7	1	Updated with changes to previous version.
7	2	Updated with changes to previous version.